AMENDMENTS FOR SERVICE AREA # 05
Round 6
(All amendments in PDF file; only Amending Agreements will be put in binder)

	Contract Start Date: May 1, 2019	**Original Bid Price $4,600,000**	
TAB #	**DESCRIPTION OF AMENDMENT**	**AMENDMENT DATE**	**REVISED CONTRACT VALUE**
1.	SA05 - Notice #1 - Changes to Infrastructure and First Year Price	May 1, 2019	$4,632,504
2.	Amending Agreement 1	February 1, 2020	
3.	Amending Agreement 2		
4.	Annual Adjustment Year 2	May 1, 2020	$4,797,577
5.	SA05 Notice #3 - Extension to Schedule 8 correction by Province		
6.	Annual Adjustment Year 3	May 1, 2021	4,852,501
7.	Amending Agreement 03 Schedule 2 (LS Items) and labour and fuel index FINAL signed	July 1, 2021	
8.			
9.			
10.			
11.			
12.			
13.			
14.			
15.			
16.			
17.			
18.			
19.			
20.			
21.			
22.			
23.			
24.			
25.			
26.			
27.			
28.			
29.			
30.			
33.			
	…continued next page		

Ministry of Transportation and Infrastructure

May 23, 2019

Capilano Highway Services Company
118 Bridge Road
West Vancouver, BC V7P 3R2
Attention: Steve Drummond

Changes to Schedule 8 ("Infrastructure") and First Contract Year Price for Year 1- Highway Maintenance Agreement for SA 05 dated May 01, 2019 between Her Majesty the Queen in right of the Province of British Columbia, represented by the Minister Responsible for the Transportation Act (the "Province") and Capilano Highway Services Company (the "Contractor") (together, the "Parties") (the "Agreement")

Dear Mr. Drummond:

1. The Parties hereby agree to make the following changes, effective as of May 01, 2019utilizing the process and calculation of Article 6 of the Agreement ("Changes to Infrastructure Within Service Area"), except for the notice provision requirement and except for the 2% threshold requirement for an adjustment to the Daily Price.

2. Schedule 8 of the Agreement is amended by the addition and modification of the Changeable Infrastructure Components provided in the table appended hereto as Schedule 1, with calculations for the adjusted fee payable to the Contractor provided.

3. The First Contract Year Price is revised from $4,600,000 to $4,632,504 and Section 1.1(ii), "First Contract Year Price" is thereby amended accordingly and the Daily Price is adjusted from $12,602.74 to $12,691.79 as of the Commencement Date.

4. Given that the First Contract Year Price is revised as of the Commencement Date, this change to Changeable Infrastructure Components and the calculations will not be included or form any part of a future calculation of a cumulate net change in the Daily Price for the First Contract Year (if any).

5. A revised Schedule 8 will be produced by the Province on or before the first anniversary date of the Agreement and delivered to the Contractor on or around that time.

Ministry of Transportation and Infrastructure

Mailing Address:
PO Box 9850 Stn Prov Govt
Victoria BC V8W 9T5

Telephone: 778-974-5360
Facsimile: 250-356-7276

Location:
940 Blanshard Street
Victoria BC V8W 3E6

www.gov.bc.ca/tran

6. All capitalized words and phrases will have the same meaning given to them in the Agreement.

7. Time will be of the essence.

8. All other terms of the Highway Maintenance Agreement are to remain in full force and effect, *mutatis mutandis.*

9. This letter constitutes the entire agreement respecting its subject matter between the Parties and no understanding or agreement, oral or otherwise, exists between the Parties with respect to this subject matter except as set out herein, and it may not be modified except by subsequent agreement in writing between the Parties.

Please acknowledge your agreement as indicated below and email a signed copy of this notice to Maintenance.Programs@gov.bc.ca and your bonding company by **June 14, 2019.**

Yours truly,

Rodrigo Disegni, Director
Rehab and Maintenance Branch

Agreed this 29 day of MAY 2019

By a duly authorized representative of
Capilano Highway Services Company

attachment(s)

Copy: Bonding company (to be sent by Contractor)
District Manager
District Operations Manager
Maintenance Contracts Coordinator, Rehab and Maintenance Branch
Ministry Solicitor, Legal Services Branch, Ministry of Attorney General

SCHEDULE 1
(to Changes to Schedule 8 and First Contract Year Price for Year 1 – Service Area 05)

Type	Number	Name	Item	Class Old		Class New		Amount		Old Cost	New Cost	Net Cost
Modify	05-B-2-01500	Savary Island Rd From Trite Lane to Herchmer Rd	Hwy	7	F	6	F	0.9	LK	s.17; s.21		
Modify	05-B-2-@-01500	Savary Island Rd From Vancouver Blvd to Vancouver Blvd	Hwy	7	F	6	F	10	LK			
Modify	05-B-2-@-01501	Vancouver Blvd From Herchmer to Savary Island Rd	Hwy	7	F	6	F	6.2	LK			
Modify	05-B-2-@-01501	Vancouver Blvd From Savary Island Rd to Malaspina Prom.	Hwy	7	F	6	F	2.6	LK			
Modify	05-B-2-@-01504	Herchmer Rd From Savary Island Rd to Van Blvd.	Hwy	7	F	6	F	0.8	LK			
Modify	05-B-2-@-01513	Malaspina Prom. From Vancouver Blvd. to Barge Ramp	Hwy	7	F	6	F	1.8	LK			
Add	05-B-1-01236	Marjorie Rd From Spectacle Lake Rd to cul-de-sac	Hwy			6	D	0.676	LK			
Add	05-B-1-01238	Hagman Way From Spectacle Lake Rd to end of r/w	Hwy			8	F	0.385	LK			

TOTAL CHANGES IN NET COST FROM START DATE **$89.05**

AMENDING AGREEMENT #1
Service Area 5

THIS AMENDING AGREEMENT dated for reference the 1st day of February, 2020 (the "Reference Date")

BETWEEN

HER MAJESTY THE QUEEN IN RIGHT OF THE PROVINCE OF BRITISH COLUMBIA, as represented by the **Minister Responsible for the Transportation Act**

(the "Province")

AND

CAPILANO HIGHWAY SERVICES COMPANY

(the "Contractor")
(together, the "Parties")

WHEREAS

A. The Province and the Contractor entered into an agreement entitled "Highway Maintenance Agreement Service Area 5" dated for reference the 1st day of May, 2019; and

B. The Province and the Contractor wish to amend the Highway Maintenance Agreement on the terms and conditions set out in this Amending Agreement.

NOW THEREFORE in consideration of the premises and the covenants and agreements set out in this Amending Agreement and for other good and valuable consideration (the receipt and sufficiency of which is hereby acknowledged by the Parties), the Parties agree as follows:

1. In this Amending Agreement, unless the context otherwise requires,

   a) "Highway Maintenance Agreement" means the agreement dated for reference the 1st day of May, 2019 between the Province and the Contractor; and

   b) Any word having initial uppercase letter have the meaning ascribed to them in the Highway Maintenance Agreement.

2. Effective as of February 1, 2020 the Highway Maintenance Agreement is amended as follows:

   a) Section 15.7(c) is hereby amended to correct the reference therein from subsection 2.7(a) to subsection 2.8(a) as follows:

      "(c) as soon as reasonably practicable within the current Contract Year, if the Two-Year Quantified Work Plan is amended pursuant to subsection 2.8(a) of Schedule 2 ("Quantified Maintenance Services")."

b) Schedule 1 ("Specifications") is hereby amended to correct the definition of "Designated Bike Lane" in Section 5 as follows:

> **"Designated Bike Lane"** means the portion of the Highway designated exclusively for bicycle use, and is identified through striping, signage, pavement markings, or a physical barrier including, but not limited to curbs, barriers and delineators."

c) Schedule 1 ("Specifications"), Performance Measure 6.01.2-2 at page 51 is hereby amended by the deletion of the Performance Criteria shown as (a) and the consequential re-alphabetizing of the remaining Performance Criteria in this table as follows, due to the original Performance Criteria (a) being a duplicate of PM 6.01.2-1 (d):

Performance Criteria	Response by Highway Classification			
	1&2	3&4	5,6&7	8
~~a) Loose, broken or rotted timber planks in other areas~~	~~2 d~~	~~3 d~~	~~5 d~~	~~30 d~~
a) Loose steel sections or broken welds in Travelled Lane	4 h	6 h	1 d	16 d
b) Loose steel sections or broken welds in other areas	2 d	3 d	5 d	30 d

d) Schedule 2 ("Quantified Maintenance Services") Appendix A ("Quantified Maintenance Services Plan Framework") is amended by the deletion of the Miscellaneous Maintenance Specification bearing the Activity Number 999300. The Parties acknowledge that this miscellaneous category does not directly correspond with a Specification and such miscellaneous activities can and will be processed as Additional Maintenance Services in accordance with Schedule 3.

e) Schedule 11 ("Equipment Requirements") is deleted in its entirety and replaced with a revised Schedule 11 ("Equipment Requirements") attached hereto as Appendix A.

3. The Contractor will advise its insurer(s) and its sureties of the changes agreed to in this Amending Agreement in writing.

4. The Province and the Contractor agree that no additional compensation is payable to the Contractor as a consequence of this Amending Agreement.

5. The terms, representations and warranties of the Highway Maintenance Agreement, as amended by this Amending Agreement, are ratified and confirmed and remain in full force and effect.

6. The Contractor has independently reviewed, inspected, examined and assessed and is knowledgeable of and has satisfied itself, including by obtaining all necessary information and documentation and professional advice, as to:

a) All labour relations issues related to the performance of the Highway Maintenance Agreement as amended by this Amending Agreement; and

b) The risks, factors, contingencies, requirements and all other circumstances and conditions, legal and otherwise, which may affect the Highway Maintenance Agreement as amended by this Amending Agreement, including the Services and the observance, compliance and performance of the Highway Maintenance Agreement as amended by this Amending Agreement.

7. The Parties acknowledge and agree that the representations described in section 6 of this Amending Agreement are in addition to the representations and warranties described in section 2.1 of the Highway Maintenance Agreement.

8. The representations and warranties described in Sections 5 and 6 of this Amending Agreement will conclusively be deemed to have been relied upon by the Province notwithstanding any assessment, review, consideration, or investigation by the Province, or any information, statement, document, plan or report furnished or submitted by the Contractor to the Province, or any information, statement, document, plan or report furnished or submitted by the Contractor to the Province, prior to or subsequent to the Province entering this Amending Agreement.

9. The Province and the Contractor acknowledge and agree that the Province has made no representation or warranty whatsoever, express of implied, with respect to this Amending Agreement of the Highway Maintenance Agreement or any part of them including the Services or any of the matters contemplated in Section 2.

10. Time will be of the essence of this Amending Agreement and remain of the essence of the Highway Maintenance Agreement, as amended by this Amending agreement.

11. References to the Highway Maintenance Agreement will be deemed to refer to the Highway Maintenance Agreement as amended by this Amending Agreement.

12. This Amending Agreement may only be amended by a written agreement signed on behalf of the Parties.

13. Neither party will assign this agreement or any right under this Amending Agreement without the prior written consent of the other party.

14. This Amending Agreement constitutes the entire agreement between the Parties with respect to the subject matter of this Amending Agreement.

15. This Amending Agreement supersedes and replaces any agreements, undertakings, understanding, discussions and communications regarding the subject matter of this Amending Agreement.

16. No waiver by either party of a breach or default by the other party in the observance, performance, or compliance of any of its obligations under this Amending Agreement will be effective unless it is in writing and no such waiver will be deemed or construed to be waiver of any other breach or default, and failure or delay on the party of either party to complain of an act or failure of the other party or to declare such other party in default,

whatever the time period for such failure or delay, will not constitute a waiver by such party of any of its rights against the other party.

17. If any provision of this Amending Agreement or the application thereof to any person or circumstance is invalid or unenforceable to any extent, the remainder of this Amending Agreement and this application of such provision to any other person or circumstance will be affected or impaired thereby and will be valid and enforceable to the extent permitted by law.

18. The Contractor will treat as confidential and will not, without the prior written consent of the Province, publish, release or disclose or permit to be published, released or disclosed, at any time, any information supplied to, obtained by, or which comes to the knowledge of the Contractor as a result of this Amending Agreement or this Amending Agreement itself except insofar as such publication, release or disclosure is necessary to enable the Contractor to fulfill its obligations under this Amending Agreement or to obtain financing in respect of this Amending Agreement.

19. Each party will, upon the reasonable request of the other, make, do, execute or cause to be made, done or executed all further and other lawful acts, deeds, things, devices, documents, instruments and assurances whatever for the better or more perfect and absolute performance of the obligations of the requested party under this Amending Agreement.

20. A reference in this Amending Agreement to a statute, whether or not that statute has been defined, means a statute of the Province of British Columbia unless otherwise stated and includes every amendment to it, every regulation made under it and any enactment passed in substitution therefor or in replacement thereof.

21. Unless the context otherwise requires, any reference to "this Agreement" or "this Amending Agreement" means this instrument and all of the schedule attached to it and any reference to any article, section, subsection, or paragraph by number is a reference to the appropriate article, section, subsection or paragraph of this Amending Agreement.

22. The headings or captions in this Amending Agreement are inserted for convenience only and do not form part of this Amending Agreement and in no way define, limit, alter or enlarge the scope or meaning of any provision of this Amending Agreement.

23. In this Amending Agreement, "person" includes a corporation, firm, association and any other legal entity and wherever the singular or masculine is used it will be construed as if the plural, the feminine or the neuter, and wherever the plural or the feminine or the neuter is used it will be construed as the singular or masculine, as the case may be, had been used where the context or the Parties so require.

24. Each appendix attached to this Amending Agreement is an integral part of this Amending Agreement as if set out at length in the body of this Amending Agreement.

25. In this Agreement, the words "including" and "includes", when following any general term or statement, are not to be construed as limiting the general term or statement to the specific items or matters set forth or to similar items or matters, but rather as permitting the general term or statement to refer to all other items or matters that could reasonable fall within the broadest possible scope of the general term or statement.

26. All dollar amounts expressed in this Amending Agreement refer to lawful currency of Canada.

27. This Amending Agreement will be governed by and construed and interpreted in accordance with the laws of the Province of British Columbia.

IN WITNESS WHEREOF the parties have executed this Agreement by their duly authorized representatives or officers as follows:

SIGNED on behalf of **Her Majesty the Queen in Right of the Province of British Columbia** by a duly authorized representative of the Minister Responsible for the Transportation Act on the 9 day of April, 2020 in the presence of:

(Witness)

For the Minister Responsible for the Transportation Act

SIGNED on behalf of **Capilano Highway Services Company** by a duly authorized representative of the Contractor on the 23 day of March, 2020 in the presence of:

(Witness)

Name: STEVEN DRUMMOND

Title: PRES.

Appendix A

SCHEDULE "11"

EQUIPMENT REQUIREMENTS

The equipment requirements in this Schedule (which, for greater certainty, includes the appendices attached hereto) are the minimum standards for the operation of the Contractor's equipment fleet. This Schedule applies to vehicles and equipment (including both Contractor-owned, leased, subcontracted, hired or rented vehicles and equipment) used by the Contractor in the performance or inspection of activities related to performing the Services, including vehicles and equipment used to transport workers to and from locations where Services are to be, or were, performed.

1. Definitions

1.1 In this Schedule, unless the context otherwise requires:

(a) **"Stripes"** means light retro reflective high conspicuity markings diamond grade ASTM 9 that are 3 inches in width in an alternating red and white pattern affixed directly onto Operational Vehicles and Equipment;

(b) **"Surfaces"** means light retro reflective high conspicuity markings hi-intensity grade ASTM 3 or diamond grade ASTM 9 in a checkerboard/harlequin pattern with a minimum of 3 rows and 3 columns of alternating black and yellow-green squares between 200 mm and 300 mm wide affixed directly onto the rear of Operational Vehicles and Equipment;

(c) **"Display Panels"** means light retro reflective high conspicuity markings hi-intensity grade ASTM 3 or diamond grade ASTM 9 in a checkerboard/harlequin pattern with a minimum of 3 rows and 3 columns of alternating black and yellow-green squares between 200 mm and 300 mm wide mounted on a smooth, flat, ridged surface (composed of materials such as aluminum or plywood), which is affixed to the rear of Operational Vehicles and Equipment used for Winter Services; and

(d) **"Operational Vehicles and Equipment"** means vehicles and equipment (including both Contractor-owned, leased, subcontracted or hired vehicles and equipment) used by the Contractor in the performance or inspection of activities related to performing the Services, including vehicles and equipment used to transport workers to and from locations where Services are to be, or were, performed.

2. General Requirements

2.1 The terms of this Schedule are in addition to, and not in substitution for, the other provisions of the Highway Maintenance Agreement, including, but not limited to, Schedule 12 ("Commercial Vehicles Permit Agreement").

2.2 Operational Vehicles and Equipment shall conform to Division 4 of the Motor Vehicle Act Regulations (B.C. Reg. 26/58).

2.3 Operational Vehicles and Equipment shall:

(a) be painted at least 80% Sherwin-Williams school bus yellow or, if no longer available, a similar colour as selected by the Province, in its sole discretion;

(b) have high conspicuity markings described in section 3 of this Schedule; and

(c) have the lighting described in section 4 of this Schedule.

2.4 Operational Vehicles and Equipment shall display the Contractor's company identification which shall:

(a) be retro reflective engineering grade ASTM 1 at a minimum;

(b) have lettering 50mm in height or greater; and

(c) be placed in accordance with Appendix A, item 3, Appendix B, item 12 and Appendix D, item 3.

2.5 Contractors and their employees shall not use personal vehicles as Operational Vehicles or Equipment, unless the personal vehicles conform to the requirements outlined in this Schedule.

2.6 Leased, subcontracted, hired or rented Operational Vehicles and Equipment that is operating for:

(a) less than 180 days in a calendar year, shall comply with the Traffic Management Manual for Work on Roadways; or

(b) 180 days or more in a calendar year or is used at any time during a calendar year for Winter Services, shall comply with all requirements of this Schedule, except the colour requirement in subsection 2.3(a) of this Schedule.

2.7 Operational Vehicles and Equipment when in use for Winter Services shall have:

(a) a functional airfoil attached horizontally to the top rear covering the full width of the Operational Vehicle or Equipment as shown in Appendix B, item 14 and Appendix C, item 9; and

(b) flags in accordance with Schedule 12 ("Commercial Vehicles Permit Agreement") and as shown in Appendix B, item 2, Appendix C, item 7 and Appendix D, item 1.

3. High Conspicuity Marking Requirements

3.1 Operational Vehicles and Equipment shall have Stripes on at least 70% of the body length and Stripes or Surfaces on at least 70% of the rear width of the Operational Vehicle or Equipment as shown in Appendix A, items 2 and 4, Appendix B, item 7, Appendix C, item 1 and Appendix D, item 8.

3.2 Stripes shall be placed at a minimum of 1 metre above the ground level, as shown in Appendix A, item 2, Appendix B, item 7, Appendix C, item 1 and Appendix D, item 8.

3.3 Additional Stripes may be placed on Operational Vehicles and Equipment at other heights dependent on the configuration of the Operational Vehicles and Equipment to provide for optimum perception of the Stripes, as shown in Appendix B, item 7, Appendix C, item 1 and Appendix D, item 8.

3.4 Operational Vehicles and Equipment when in use for Winter Services shall have:

(a) if equipped with a plow wing blade, Stripes on the push-arm support for all plow wing blades in a location where it is visible when the plow wing blade is in use and when it is not in use; and

(b) a Display Panel, which shall fill the rear of such Operational Vehicles and Equipment as shown in Appendix B, item 18, Appendix C, item 12 and Appendix D, item 13, and shall not contain any wording that takes up more than 70% of the Display Panel.

4. Lighting Requirements

4.1 All Operational Vehicles and Equipment shall operate with a permanently mounted rotating beacon with 360 degree visibility as shown in Appendix A, item 1, Appendix B, item 5, Appendix C, item 2, and Appendix D, item 5.

4.2 Operational Vehicles and Equipment that are plow trucks, as shown in Appendix B, shall operate at all times with:

(a) if equipped with a dump box, one amber dump box light mounted on the top of the dump box facing into the dump box, as shown in Appendix B, item 4;

(b) white mid-side mounted, rear facing backup lights, as shown in Appendix B, item 11;

(c) amber cab-mounted clearance lights, as shown in Appendix B, item 13;

(d) red rear-mounted marker lights, as shown in Appendix B, item 16; and

(e) amber side-mounted side facing marker lights, as shown in Appendix B, item 8.

4.3 Operational Vehicles and Equipment that are plow trucks, as shown in Appendix B, when in use for Winter Services shall have:

(a) if equipped with a plow wing blade, rear and forward-facing flashing or strobing amber warning lights 100mm in size mounted to the top of the plow wing blade, as described in subsection 3.1(c)(ii) and section 3.1(e)(iv) of Schedule 12 ("Commercial Vehicles Permit Agreement") and shown in Appendix B, item 3;

(b) forward facing auxiliary snow plow head lamps with signals in accordance with section 7 of Schedule 12 ("Commercial Vehicles Permit Agreement") and as shown in Appendix B, item 6;

(c) a minimum of two rear-mounted pedestal tail and turning lights on the top left and on the top right affixed 150mm below the rear warning beacons described in subsection 4.2(d), as shown in Appendix B, item 15;

(d) if equipped with a plow wing blade, one amber side-mounted wing plow light facing onto the wing blade, as shown in Appendix B, item 9;

(e) if equipped with one or more underbody plow blades, side-mounted amber underbody plow light(s) facing down onto the road surface in front of each underbody plow blade, as shown in Appendix B, item 10;

(f) one amber sander spinner/spray bar light, as shown in Appendix B, item 19; and

(g) two rear-mounted, rear-facing flashing or strobing amber warning beacons on both the top left and on the top right that are 127mm to 178mm in diameter and 76mm to 152 mm in height from the body as shown in Appendix B, item 1.

4.4 Operational Vehicles and Equipment that are tow plows, as shown in Appendix C, shall operate at all times with:

(a) amber flashing or strobing warning lights side mounted to the gate, as shown in Appendix C, item 3;

(b) one amber flashing or strobing warning light side-mounted to the frame, rear facing, as shown in Appendix C, item 6;

(c) one white rear-mounted, forward facing single beam head lamp, as shown in Appendix C, item 8;

(d) two rear-mounted, rear-facing flashing or strobing amber warning beacons on both the top left and on the top right that are 127mm to 178mm in diameter and 76mm to 152 mm in height from the body as shown in Appendix C, item 4;

(e) a minimum of two rear-mounted pedestal tail and turning lights on the top left and on the top right affixed 150mm below the rear warning beacons described in subsection 4.4(d) as shown in Appendix C, item 10; and

(f) amber side-mounted, side facing marker lights, as shown in Appendix C, item 5.

4.5 Operational Vehicles and Equipment that are graders, as shown in Appendix D, shall operate at all times with:

(a) amber flashing or strobing intersection warning lights outward side facing, as shown in Appendix D, item 2;

(b) one white, side-mounted wing light facing the deployed plow wing blade as shown in Appendix D, item 4;

(c) two white head lamps with signals, as shown in Appendix D, item 6;

(d) four blade lights mounted on each side of the cabin and frame facing ahead and behind the underbody plow blade, as shown in Appendix D, item 9;

(e) two white cab-mounted, forward facing head lamps, as shown in Appendix D, item 10;

(f) two white rear-facing, body mounted back up lights, as shown in Appendix D, item 11; and

(g) two white cab mounted working lights as shown in Appendix D, item 12.

4.6 Operational Vehicles and Equipment that are graders, if equipped with a plow wing blade, as shown in Appendix D, when in use for Winter Services must have rear and forward facing flashing or strobing amber warning lights 100mm in size mounted to the top of the plow wing blade as described in subsection 3.1(c)(ii) and section 3.1(e)(iv) of Schedule 12 ("Commercial Vehicles Permit Agreement") and shown in Appendix D, item 7.

4.7 Operational Vehicles and Equipment when in use for Winter Services shall have light bars with flashing or strobing lights mounted on the outside edges of the Display Panel described in subsection 3.4(b) of this Schedule, as shown in Appendix B, item 18 and Appendix C, item 11 and Appendix D, item 14, that shall:

(a) cover a minimum of 75% of the top edge and 75% of each side edge of the Display Panel;

(b) be a minimum of 51mm in width and 610mm in length per light bar, with each section of flashing lights within the light bar being a minimum of 38mm in width and 64mm in length; and

(c) alternate flashing or strobing sections of amber.

4.8 Sections 2.7(a), 3.4 and 4.7 do not apply to maintenance vehicles depicted in Appendix A.

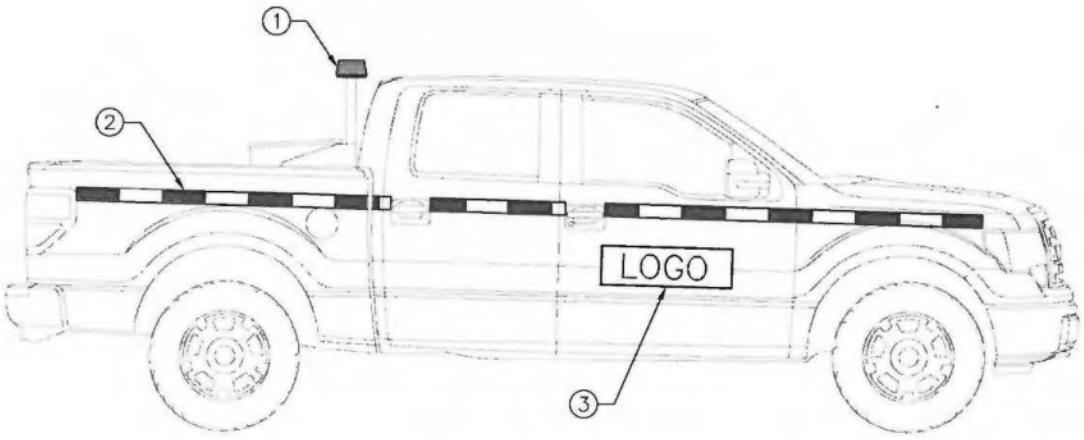

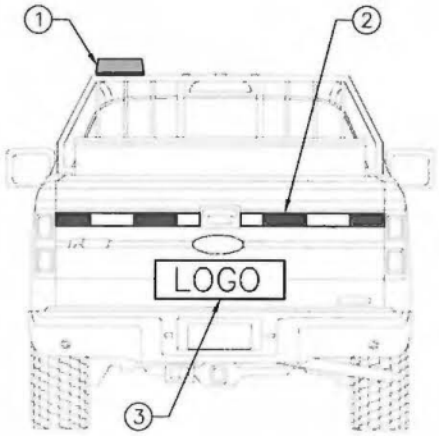

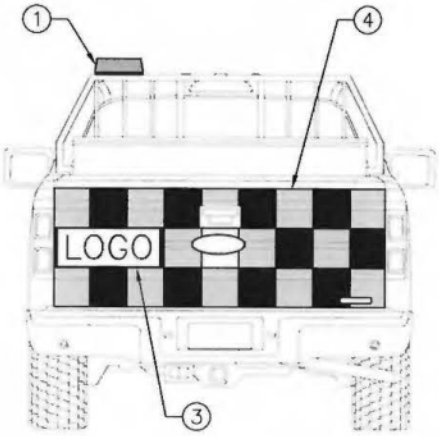

ITEM	DESCRIPTION
1	ROTATING BEACON
2	STRIPES
3	COMPANY IDENTIFICATION
4	SURFACE

SCALE N.T.S.

CAD FILE NAME: _____

DATE _____

REV	DATE	REVISIONS	SIGNATURE

BRITISH COLUMBIA

MINISTRY OF TRANSPORTATION AND INFRASTRUCTURE

EQUIPMENT REQUIREMENTS
APPENDIX A
MAINTENANCE VEHICLE

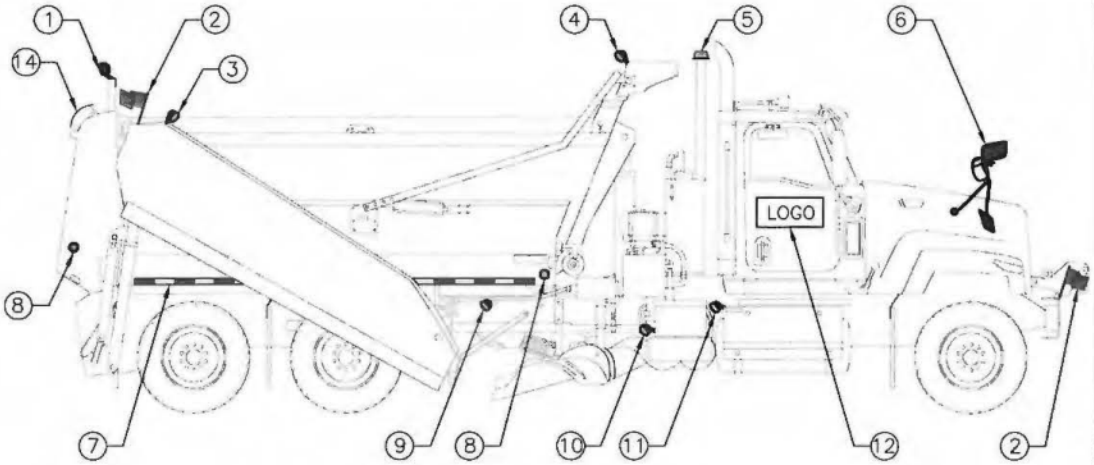

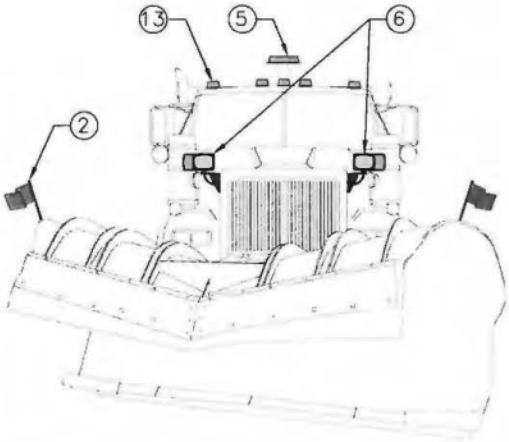

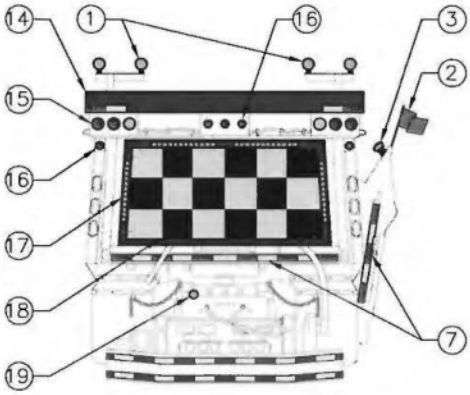

ITEM	DESCRIPTION
1	WARNING BEACONS
2	FLAGS
3	WING BLADE WARNING LIGHT
4	DUMP BOX LIGHT
5	ROTATING BEACON
6	AUXILIARY SNOW PLOW HEAD LAMPS (WITH SIGNALS)
7	STRIPES
8	SIDE MARKER LIGHTS
9	WING PLOW LIGHT
10	UNDERBODY PLOW LIGHT
11	CAB MOUNT BACKUP LIGHTS
12	COMPANY IDENTIFICATION
13	CLEARANCE LIGHTS
14	AIR FOIL
15	PEDESTAL TAIL LIGHTS & TURNING LIGHTS
16	REAR MARKER LIGHTS
17	LIGHT BARS
18	DISPLAY PANEL
19	SANDER SPINNER / SPRAY BAR LIGHT

SCALE N.T.S.

CAD FILENAME: _____

DATE: _____

REV	DATE	REVISIONS	SIGNATURE

BRITISH COLUMBIA

MINISTRY OF TRANSPORTATION AND INFRASTRUCTURE

EQUIPMENT REQUIREMENTS
APPENDIX B
PLOW TRUCK

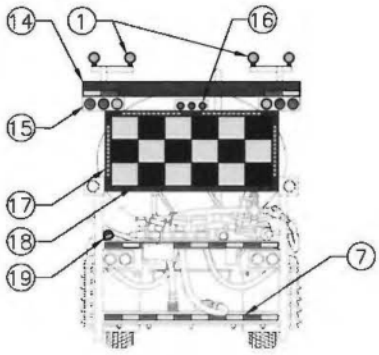

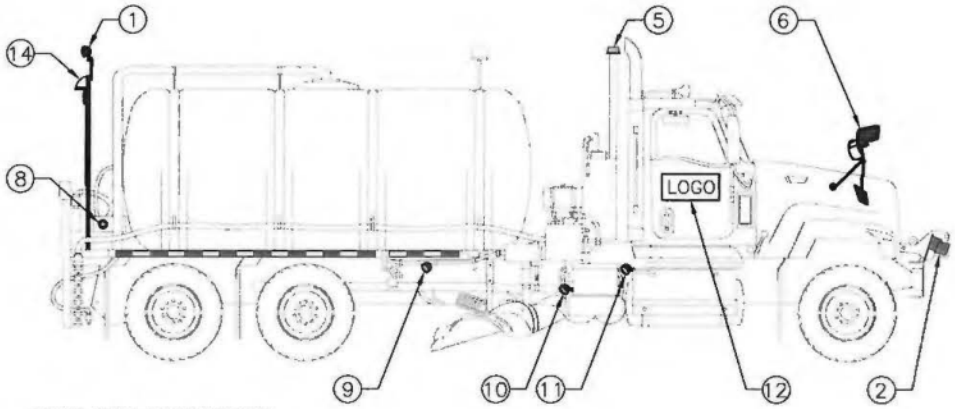

LIQUID TANK CONFIGURATION

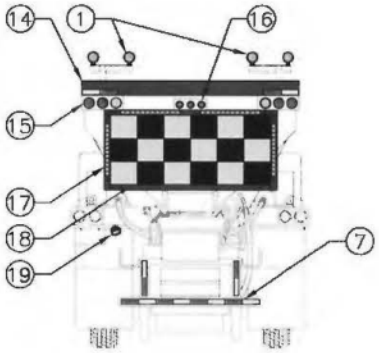

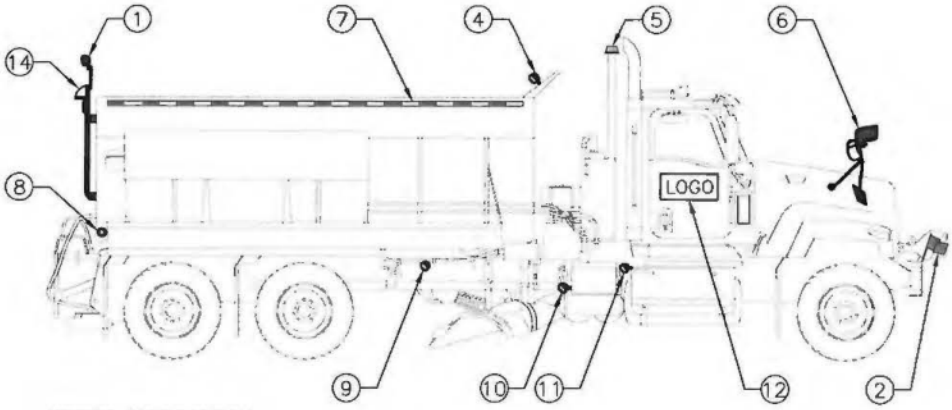

HOPPER CONFIGURATION

SCALE N.T.S.		CAD FILE NAME: _____ DATE: _____	
REV	DATE	REVISIONS	SIGNATURE

BRITISH COLUMBIA

MINISTRY OF TRANSPORTATION AND INFRASTRUCTURE

EQUIPMENT REQUIREMENTS
APPENDIX B
PLOW TRUCK

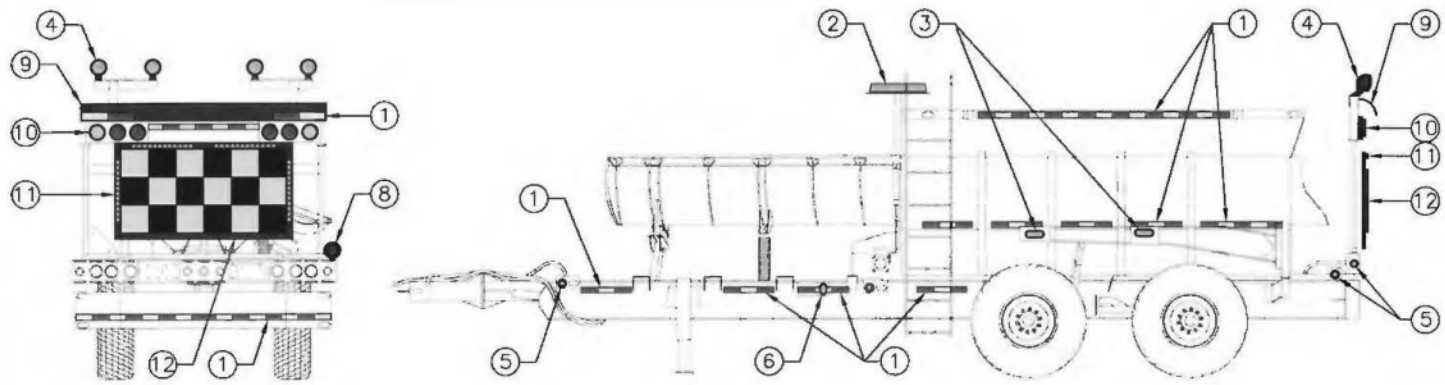

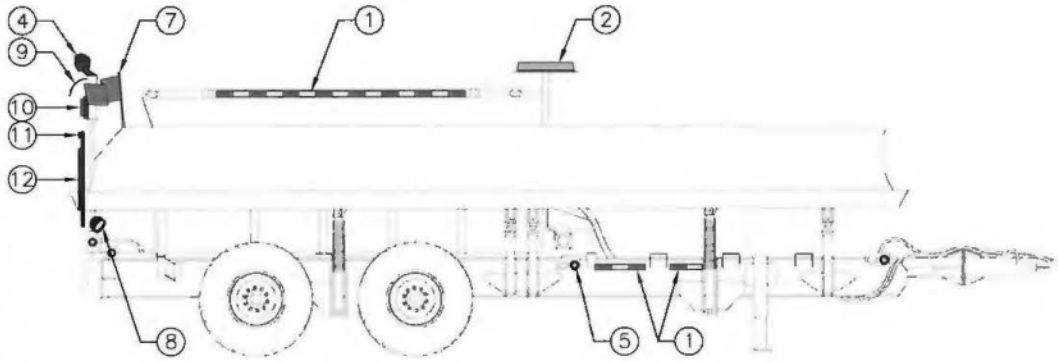

ITEM	DESCRIPTION
1	STRIPES
2	ROTATING BEACON
3	WARNING LIGHTS ON GATE
4	WARNING BEACONS
5	SIDE MARKER LIGHTS
6	WARNING LIGHT ON FRAME
7	FLAGS
8	SINGLE BEAM HEAD LAMP
9	AIR FOIL
10	PEDESTAL TAIL LIGHTS & TURNING LIGHTS
11	LIGHT BARS
12	DISPLAY PANEL

SCALE N.T.S.

CAD FILENAME: _____

DATE: _____

REV	DATE	REVISIONS	SIGNATURE

BRITISH COLUMBIA

MINISTRY OF TRANSPORTATION AND INFRASTRUCTURE

EQUIPMENT REQUIREMENTS

APPENDIX C

TOW PLOW

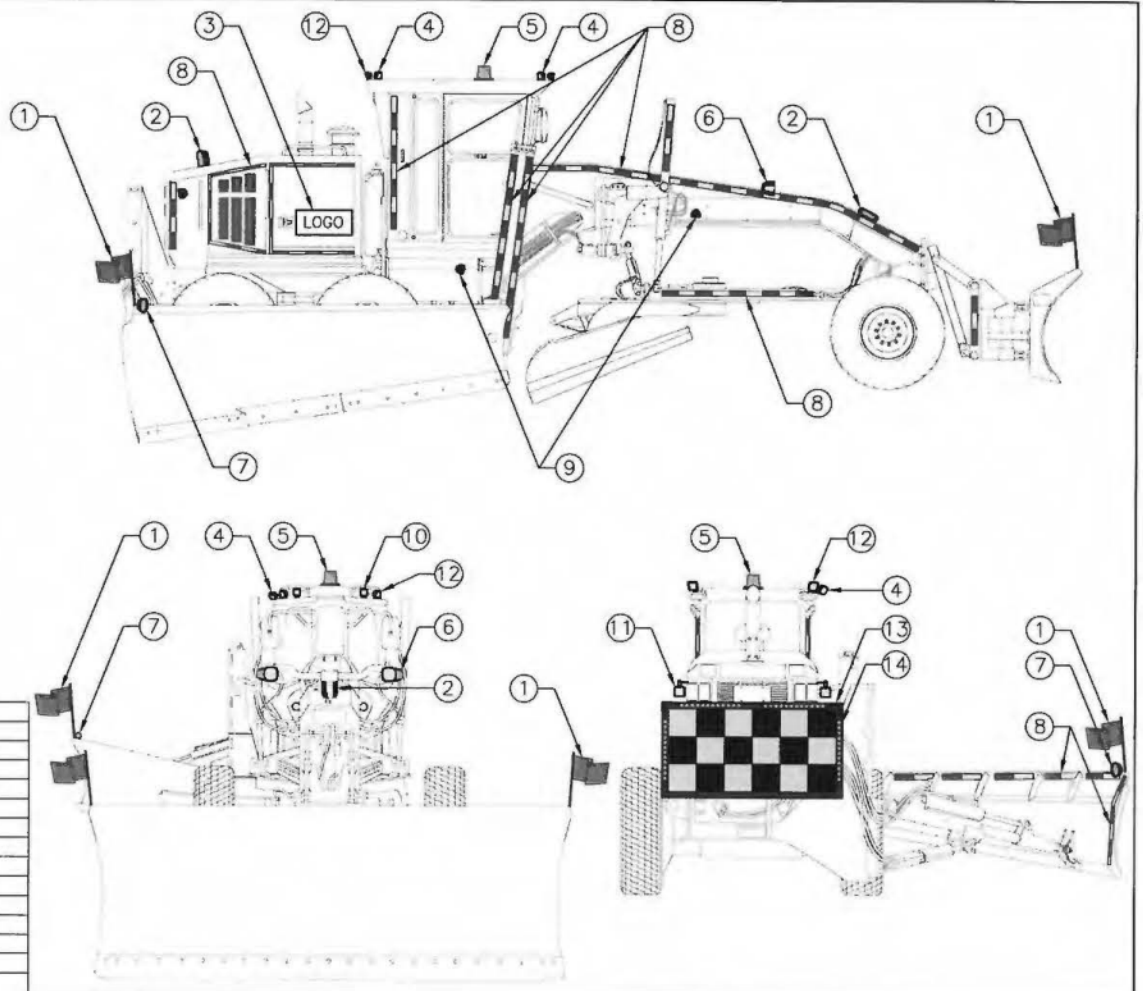

ITEM	DESCRIPTION
1	FLAGS
2	INTERSECTION WARNING LIGHT
3	COMPANY IDENTIFICATION
4	SIDE MOUNT WING LIGHTS
5	ROTATING BEACON
6	HEAD LAMPS WITH SIGNALS
7	WING BLADE WARNING LIGHT
8	STRIPES
9	BLADE LIGHTS
10	HEAD LAMPS
11	BACK-UP LIGHTS
12	WORKING LIGHTS
13	DISPLAY PANEL
14	LIGHT BARS

SCALE N.T.S.

CAD FILE NAME _____

DATE _____

REV	DATE	REVISIONS	SIGNATURE

BRITISH COLUMBIA

MINISTRY OF TRANSPORTATION AND INFRASTRUCTURE

EQUIPMENT REQUIREMENTS
APPENDIX D
GRADER

AMENDING AGREEMENT #2
Service Area 5

THIS AMENDING AGREEMENT dated for reference the 15th day of December 2020 (the "Reference Date")

BETWEEN

HER MAJESTY THE QUEEN IN RIGHT OF THE PROVINCE OF BRITISH COLUMBIA, as represented by the **Minister Responsible for the Transportation Act**

(the "Province")

AND

CAPILANO HIGHWAY SERVICES COMPANY

(the "Contractor")
(together, the "Parties")

WHEREAS

A. The Parties entered into an agreement entitled "Highway Maintenance Agreement Service Area 5" dated for reference the 1st day of May, 2019, as amended.

B. The Province issued on May 23, 2019, a notice of change to Infrastructure and First Year Annual Price revision, resulting in a revised First Year Annual Price of $4,632,504.

C. The Province estimates further omissions to the Infrastructure from the Commencement Date of the Agreement and wishes to make a payment for Routine Maintenance Services provided in the First Contract Year and to reconcile the payment with the actual corrected Infrastructure Inventory subsequently.

D. The Parties wish to amend the Highway Maintenance Agreement on the terms and conditions set out in this Amending Agreement.

NOW THEREFORE in consideration of the premises and the covenants and agreements set out in this Amending Agreement and for other good and valuable consideration (the receipt and sufficiency of which is hereby acknowledged by the Parties), the Parties agree as follows:

1. In this Amending Agreement, unless the context otherwise requires,
   a) "Highway Maintenance Agreement" means the agreement dated for reference the 1st day of May, 2019 between the Parties, as amended; and

   b) Any word having initial uppercase letter have the meaning ascribed to them in the Highway Maintenance Agreement.

2. The First Year Annual Price is revised from $4,632,504 to $4,682,504 ("New First Year Annual Price") for Routine Maintenance Services already completed in relation to the additional Infrastructure. The New First Year Annual Price is the Ministry's best estimate for the value of Routine Maintenance provided to that Infrastructure not included in the original Schedule 8 and Schedule 1 of the May 23, 2019 notice. Upon execution of this Amending Agreement, the Province shall:

   a) make a one-time payment to the Contractor of $50,000.00 as an estimate of the increase to the Annual Price for Routine Maintenance Services already completed in the First Contract Year;

   b) use the New First Year Annual Price when calculating the Winter 2019/20 and Summer 2020 Contractor Assessment Program payment and;

   c) complete the second Contract Year (May 2020 – April 2021) Annual Adjustment using the New First Year Annual Price.

3. The Parties agree that this estimate to the Infrastructure or the calculation in Section 5 does not alter or amend the Quantified Maintenance Services.

4. Once the Province prepares and delivers to the Contractor the revised Schedule 8 with the corrected additional Infrastructure (in accordance with Section 5 below) the subsequent Contract Years' annual adjustment to the Annual Price will be based upon this confirmed or corrected value of the First Contract Year's Annual Price.

5. The correction to Schedule 8 and the additional Infrastructure thereto shall be concluded by the Ministry no later than June 30, 2021 or such other date the Ministry provides by notice in writing to the Contractor, accompanied with the amended Schedule 8 and all supporting calculations of the difference in value to the Annual Price.

   a) If the actual change to the First Annual Price for the additional Schedule 8 Infrastructure is greater than $50,000.00 there shall be an additional payment to the Contractor for the difference between the payment (in Section 2 herein) and the correct amount for the First Contract Year.

   b) For greater clarity, the New First Year Annual Price will be used in the second Contract Year Annual Price Adjustment, to be completed upon execution of this Amending Agreement.

   b) If the actual change to the First Annual Price for the additional Schedule 8 Infrastructure is less than $50,000.00 the difference from the payment in Section 2 and the correct amount may be set off by the Province in a future payment or payments to the Contractor.

6. The Contractor will advise its insurer(s) and its sureties of the changes agreed to in this Amending Agreement in writing.

7. The terms, representations and warranties of the Highway Maintenance Agreement, as amended by this Amending Agreement, are ratified and confirmed and remain in full force and effect.

8. The Contractor has independently reviewed, inspected, examined and assessed and is knowledgeable of and has satisfied itself, including by obtaining all necessary information and documentation and professional advice, as to:

   a) All labour relations issues related to the performance of the Highway Maintenance Agreement as amended by this Amending Agreement; and

   b) The risks, factors, contingencies, requirements and all other circumstances and conditions, legal and otherwise, which may affect the Highway Maintenance Agreement as amended by this Amending Agreement, including the Services and the observance, compliance and performance of the Highway Maintenance Agreement as amended by this Amending Agreement.

9. Time will be of the essence of this Amending Agreement and remain of the essence of the Highway Maintenance Agreement, as amended by this Amending agreement.

10. References to the Highway Maintenance Agreement will be deemed to refer to the Highway Maintenance Agreement as amended by this Amending Agreement.

11. This Amending Agreement may only be amended by a written agreement signed on behalf of the Parties.

12. No party will assign this agreement or any right under this Amending Agreement without the prior written consent of the other party.

13. This Amending Agreement constitutes the entire agreement between the Parties with respect to the subject matter of this Amending Agreement.

14. This Amending Agreement supersedes and replaces any agreements, undertakings, understanding, discussions and communications regarding the subject matter of this Amending Agreement.

15. No waiver by any party of a breach or default by the other party in the observance, performance, or compliance of any of its obligations under this Amending Agreement will be effective unless it is in writing and no such waiver will be deemed or construed to be waiver of any other breach or default, and failure or delay on the party of either party to complain of an act or failure of the other party or to declare such other party in default, whatever the time period for such failure or delay, will not constitute a waiver by such party of any of its rights against the other party.

16. If any provision of this Amending Agreement or the application thereof to any person or circumstance is invalid or unenforceable to any extent, the remainder of this Amending Agreement and this application of such provision to any other person or circumstance will be affected or impaired thereby and will be valid and enforceable to the extent permitted by law.

17. The Contractor will treat as confidential and will not, without the prior written consent of the Province, publish, release or disclose or permit to be published, released or disclosed, at any time, any information supplied to, obtained by, or which comes to the knowledge of the Contractor as a result of this Amending Agreement or this Amending Agreement itself except insofar as such publication, release or disclosure is necessary to enable the Contractor to fulfill its obligations under this Amending Agreement or to obtain financing in respect of this Amending Agreement.

18. Each party will, upon the reasonable request of the other, make, do, execute or cause to be made, done or executed all further and other lawful acts, deeds, things, devices, documents, instruments and assurances whatever for the better or more perfect and absolute performance of the obligations of the requested party under this Amending Agreement.

19. A reference in this Amending Agreement to a statute, whether or not that statute has been defined, means a statute of the Province of British Columbia unless otherwise stated and includes every amendment to it, every regulation made under it and any enactment passed in substitution therefor or in replacement thereof.

20. Unless the context otherwise requires, any reference to "this Agreement" or "this Amending Agreement" means this instrument and all of the schedule attached to it and any reference to any article, section, subsection, or paragraph by number is a reference to the appropriate article, section, subsection or paragraph of this Amending Agreement.

21. The headings or captions in this Amending Agreement are inserted for convenience only and do not form part of this Amending Agreement and in no way define, limit, alter or enlarge the scope or meaning of any provision of this Amending Agreement.

22. In this Amending Agreement, "person" includes a corporation, firm, association and any other legal entity and wherever the singular or masculine is used it will be construed as if the plural, the feminine or the neuter, and wherever the plural or the feminine or the neuter is used it will be construed as the singular or masculine, as the case may be, had been used where the context or the Parties so require.

23. Each appendix attached to this Amending Agreement is an integral part of this Amending Agreement as if set out at length in the body of this Amending Agreement.

24. In this Amending Agreement, the words "including" and "includes", when following any general term or statement, are not to be construed as limiting the general term or statement to the specific items or matters set forth or to similar items or matters, but rather as permitting the general term or statement to refer to all other items or matters that could reasonable fall within the broadest possible scope of the general term or statement.

25. All dollar amounts expressed in this Amending Agreement refer to lawful currency of Canada.

26. This Amending Agreement may be executed in counterparts by each party under this Agreement signing a separate copy of it (including photocopy, or Adobe Acrobat copy) and delivering it to the other by email, with an originally executed copy of it to follow by personal delivery, mail or courier pursuant to Section 21 of the Highway Maintenance Agreement.

27. This Amending Agreement will be governed by and construed and interpreted in accordance with the laws of the Province of British Columbia.

IN WITNESS WHEREOF the parties have executed this Agreement by their duly authorized representatives or officers as follows:

SIGNED on behalf of **Her Majesty the Queen in Right of the Province of British Columbia** by a duly authorized representative of the Minister Responsible for the Transportation Act on the 2 day of February, 2021)

For the Minister Responsible for the Transportation Act

SIGNED on behalf of **Capilano Highway Services Company** by a duly authorized representative of the Contractor on the 27 day of JANUARY 2021)

Name: STEVEN DRUMMOND

Title: PRESIDENT

Ministry of
Transportation
and Infrastructure

SCHEDULE "6" ANNUAL ADJUSTMENT PROCESS NOTICE

February 3, 2021

Capilano Highway Services Company
118 Bridge Road
West Vancouver, BC V7P 3R2

Attention: **Steve Drummond**

Re: Highway Maintenance Agreement Service Area No. **05** between HER MAJESTY THE QUEEN IN RIGHT OF THE PROVINCE OF BRITISH COLUMBIA, represented by the Minister Responsible for the Transportation Act (the "Province") and Capilano Highway Services Company, (the "Contractor") dated **May 1, 2019** (the "Agreement")

Pursuant to Section 3 of Schedule "6" of the Agreement, the Province hereby delivers the following calculations to be implemented for **Contract Year 2:**

1. Revised Unit Prices and Total Lump sum Value to Quantified Maintenance Services (Schedule "2");
2. Daily and yearly Rates for Changes to Infrastructure (Schedule "7");
3. Infrastructure (Schedule "8"); [will be provided once field work is completed as per Amending Agreement #2]
4. Automated Weather Stations Fee (Schedule "10");
5. Adjusted Annual Price (Schedule "6")

The Adjusted Annual Price, as calculated in accordance with the Annual Adjustment Process, is **$4,797,577.**

The calculations of the foregoing are attached as required by Schedule 6 Section 4, and the following appendices are revised and delivered in accordance with Schedule 6 Section 6: Appendices A of Schedule 2 ("Quantified Maintenance Services"), Schedule 7 ("Rates for Changes to Infrastructure") and Schedule 10 ("Automated Weather Station") and Appendices A, B, C and D of Schedule 8 ("Infrastructure").

Thirty days following receipt, this Annual Adjustment Process will be final and binding and will be effective commencing on and including **May 1, 2020.**

Please acknowledge receipt of the Schedules as indicated below and return a copy of this Notice to the attention of the writer on or before **February 19, 2021.**

District Manager, Transportation
Ministry of Transportation and Infrastructure

Acknowledged receipt and consented this 9 day of February 2021

Capilano Highway Services Company
Duly Authorized Signatory

Copy: Bonding Company
Manager, Maintenance Agreements (Maintenance.Programs@gov.bc.ca)
Ministry Solicitor, Legal Services Branch, Ministry of Justice and Attorney General
Regional Director

SA05 Year 1 Annual Adjustment Price Calculation (in Preparation for Year 2)

Price Index Adjustment Factor Calculation

Index	2018	2019	% Change	% Weighting	Inflation
Labour Index	149.41	152.79	2.26%	47.0%	1.0632%
Fuel Index	118.90	113.47	-4.57%	8.0%	-0.3653%
Residual Index	105.40	109.73	4.11%	38.0%	1.5611%
				Price Index Adjustment	2.2590%
				Price Index Adjustment Factor (rounded)	1.02259

Adjust Annual Price Calculation
[(A-i) x B x C] +i +/- D +/- E

A	Annual Price for Immediately Preceding Contract Year	$ 4,632,504.00		
	Plus/Minus special agreements (if applicable) (Amendment #2)	$ 50,000.00	$	4,682,504.00
i	Less: Insurer Premium Quote (Yr 1)		$	s.17; s.21
B	Multiply by: Changes to Infrastructure Adjustment Factor (Art 6)			1.00000
C	Multiply by: Price Adjustment Factor			1.02259
i	Add Back: Insurer Premium Quote (Yr 1)		$	s.17; s.21
	New Insurance Premium Quote (Yr2)	$ s.17; s.21		
	less previous year's premium	$		
	Difference	$		
D	Plus/Minus: 80% of difference		$	s.17; s.21
E	Changes to Maintenance Services Value (Art 7)			0.00000
	Annual Adjusted Price for Year 2		$	**4,797,576.95**
	Annual Adjusted Price for Year 2	**ROUNDED**	$	**4,797,577**

SCHEDULE "2"

QUANTIFIED MAINTENANCE SERVICES PLAN FRAMEWORK

Contract Year 2

Maintenance Specification	Quantified Maintenance Services	Activity Number	Unit of Measure	Quantities for Unit Price Items	Unit Price	Lump Sum Value	Total
Asphalt Pavement Maintenance	Overlay Patch	101300	tonne	s.17; s.21			s.17; s.21
	Overlay Patch - Isolated	101301	tonne				
	Overlay Patch (handwork)	101302	tonne				
	Overlay Patch - Isolated (handwork)	101303	tonne				
	Replacement Patch	101304	tonne				
	Replacement Patch (handwork)	101305	tonne				
	Spray Patching	101306	litre				
	Spray Patching - Isolated	101307	litre				
	Crack Sealing	101308	litre				
	Crack Filling	101309	litre				
Surface Treatment	graded aggregate seal	102300	m2				
	graded aggregate seal - Isolated	102301	m2				
	sand seal	102302	m2				
Highway and Shoulder Grading and Re-shaping	Grading	103300	rd km				
	Grading (Re-shaping)	103301	rd km				
	Shoulder Grading	103302	sh km				
	Shoulder Grading (Re-shaping)	103303	sh km				
Dust Control and Base Stabilization	dust control	104300	litre				
	Base Stabilization	104301	litre				
Surface and Shoulder Gravelling	surface gravelling – crush	105300	m3				
	surface gravelling – crush - Isolated	105301	m3				
	surface gravelling - pit run	105302	m3				
	surface gravelling - pit run - Isolated	105303	m3				
	Shoulder gravelling - crush	105304	m3				
	Shoulder gravelling - crush - Isolated	105305	m3				
	Shoulder gravelling - pit run	105306	m3				
	Shoulder gravelling - pit run - Isolated	105307	m3				
Road Base Maintenance	repair	106300	m3			LS	
Surface Cleaning	remove Accumulations (barrier)	107300	lin m				
	remove Accumulations (additional)	107301	sh km				
Cattle Guard System Maintenance	replace, new, elevation correction	109300	ea			LS	
Raised Hard Surfaced Infrastructure and Safety Device Maintenance	barrier cable - replace	110300	lin m				
	barrier cable - new	110301	lin m			LS	
	barrier concrete - replace	110302	ea				
	barrier concrete - new	110303	lin m			LS	
	barrier steel - replace	110304	lin m				
	barrier steel - new	110305	lin m			LS	
	traffic island - replace	110306	m2			LS	
	traffic island - new	110307	m2			LS	
	curb asphalt - replace	110308	lin m				
	curb asphalt - new	110309	lin m				
	curb concrete - replace	110310	lin m				
	curb concrete - new	110311	lin m				
	impact attenuator - replace, new	110312	ea			LS	
	anti-glare - replace, new	110313	ea			LS	
	sidewalks - replace	110314	ea			LS	
	pedestrian paths - replace, new	110315	ea			LS	
	spillways - replace, new	110316	ea			LS	
Ditch Maintenance	0 - 30 kms one way haul distance	201300	lin m				
	31 - 60 kms one way haul distance	201301	lin m				

SCHEDULE "2"

QUANTIFIED MAINTENANCE SERVICES PLAN FRAMEWORK

Contract Year 2

Maintenance Specification	Quantified Maintenance Services	Activity Number	Unit of Measure	Quantities for Unit Price Items	Unit Price	Lump Sum Value	Total
	61 - 100 kms one way haul distance	201302	lin m	s.17; s.21			s.17; s.21
	new construction, repair embankments/ back slopes, widen/deepen collection areas	201303	lin m			LS	
	remove localized minor rock	201304	m3			LS	
	side casting	201305	lin m				
Drainage Appliance Maintenance	removal of Debris/obstructions	202301	ea			LS	
	culvert install (to 400mm) max. 2m height of cover	202302	lin m				
	culvert install (401mm to 600mm) max. 2m height of cover	202303	lin m				
	culvert install (601mm to 1200mm) max. 2m height of cover	202304	lin m				
	culvert install (to 2999mm)	202305	lin m			LS	
	Flume install (to 2999mm)	202306	lin m			LS	
	re-setting, repair, replace and new other Drainage Appliances	202307	ea			LS	
	boring, auguring, pushing, installing inserts	202308	lin m			LS	
	install Rip-rap or other suitable material	202309	m3			LS	
	Trash Racks - clean	202310	m3				
	Trash Racks - repair	202311	ea			LS	
	Trash Racks - replace, new	202312	ea			LS	
	catch basin install (metal, concrete)	202313	ea			LS	
Shore, Bank and Watercourse Maintenance	removal of Debris/obstructions, provide catchment areas	203300	m3			LS	
	install Rip-rap or other suitable material	203301	m3			LS	
Vegetation Control	cut vegetation (Shoulder top and 0 - 1.8m)	401300	sh km				
	cut vegetation (Rest Areas/other specified locations)	401301	m2				
	cut vegetation (Raised Hard Surfaced Infrastructure)	401302	m2				
Brush, Tree and Danger Tree Removal	brushing (machine)	402300	sh km				
	brushing (hand cutting)	402301	m2			LS	
	brushing (hand cutting individual tree), Danger Tree removal, overhanging trees/limbs	402302	ea			LS	
Fence Maintenance	Schedule 1 and 2 fences - temporary repairs	405300	lin m				
	Schedule 1 and 2 fences - permanent repairs	405301	lin m				
	Specialty Fences - temporary and permanent repair, new	405302	lin m			LS	
Roadside Catchment Appurtences Maintenance	repair, replace	406300	ea			LS	
	crack seal/repair	406301	litre			LS	
	rock/sediment/Debris removal	406302	m3			LS	
	relief well - clean	406303	ea			LS	
Sign System Maintenance	delineator system install - plastic post/ fibreglass post, telspar, u channel post, Shoulder mount	501300	ea			LS	
	delineator install - barrier, top mount or side mount, W055, shoulder mount	501301	ea			LS	
	1 post Sign System install (< 1.09 m2)	501302	ea				
	1 post Sign System install (> 1.09 m2)	501303	ea				
	2 post Sign System install (< 3.2 m2)	501304	ea				
	2 post Sign System install (> 3.2 m2)	501305	ea				
	3 post Sign System install - (< 10.1 m2)	501306	ea				
	3 post Sign System install - (> 10.1 m2)	501307	ea				
	Sign install (< 1.09 m2)	501308	ea				
	Sign install (1.1 m2 to 3.2 m2)	501309	ea				
	Sign install (3.3 m2 to 7.1 m2)	501310	ea				
	Sign install (7.2 m2 to 10.1 m2)	501311	ea				
	Sign Install (> 10.1 m2)	501312	ea				
	Sign Face Overlay Install (< 1.09 m2)	501313	ea				
	Sign Face Overlay Install (1.1 m2 to 3.2 m2)	501314	ea				
	Sign Face Overlay Install (3.3 m2 to 7.1 m2)	501315	ea				
	Sign Face Overlay install (7.2 m2 to 10 1 m2)	501316	ea				
	Sign Face Overlay install (> 10.1 m2)	501317	ea				

SCHEDULE "2"

QUANTIFIED MAINTENANCE SERVICES PLAN FRAMEWORK

Contract Year 2

Maintenance Specification	Quantified Maintenance Services	Activity Number	Unit of Measure	Quantities for Unit Price Items	Unit Price	Lump Sum Value	Total
Temporary Pavement Markings and Eradication	restore or new temporary pavement markings	502300	line km	s.17; s.21			s.17; s.21
	restore or new temporary pavement markings	502301	m2				
	eradicate temporary pavement markings	502302	line km				
	eradicate temporary pavement markings	502303	m2				
	eradicate permanent pavement markings	502304	line km				
	eradicate permanent pavement markings	502305	m2				
Bridge Deck Maintenance	timber Re-decking (Minor)	601300	m2				
	timber Re-decking (Major)	601301	m2				
	linseed oil/mineral spirit treatment	601302	m2				
	concrete repair	601303	m3				
	crack seal	601304	lin m				
	crack repair	601305	lin m				
Bridge Joint Maintenance	Bridge Joint Armour and Joint seal replace	604300	lin m				
Bridge Bearing Maintenance	Bridge Bearing and components replace	605300	ea			LS	
Structure Minor Coating	steel/timber surfaces, steel/timber rail systems	607300	m2			LS	
Concrete Structure Maintenance	concrete repair, crack seal/repair	608300	m3			LS	
Bridge Piling Maintenance	replace	610300	ea			LS	
Retaining Wall Maintenance	Retaining Wall and components - repair, replace	611300	m2			LS	
Timber Truss Bridge Maintenance	Truss Rods, Lateral Rods, End Posts, Main Braces, Counter Braces, Floor Beams, Corbels - replace	613300	ea			LS	
	Truss Rods or Camber - adjust	613301	ea			LS	
Timber and Log Bridge Maintenance	components - replace	614300	ea			LS	
LAS - Invasive Plants Management	seeding	913300	m2			LS	
LAS - Pavement Surface Reflectors	replace, new	917300	ea			LS	
LAS - Highway Crossing Infrastructure	surface repairs	911300	m3			LS	
LAS - Wildlife Exclusion System Maintenance	repairs	925300	ea			LS	
	brush removal	925301	m2				
	height restoration	925302	ea			LS	
LAS - Sound Wall Maintenance	Sound Wall and components - repair, replace	923300	m2			LS	
TOTAL VALUE OF UNIT PRICE ITEMS							
TOTAL LUMP SUM VALUE							
TOTAL VALUE OF QUANTIFIED MAINTENANCE SERVICES							**$2,932,378.57**

Contract Year	**2**			**Service Area**	5		**Instruction #**
	Start Date	01-May-20	**End Date**	30-Apr-21		**Days in Year**	**365**
			Total Contract Days		**365**		
Winter Period 1	1-Dec-20	to	28-Feb-21		90	days / year	
Winter Period 2		to				days / year	
			Totel Contract Winter Days		**90**		
Summer Period 1	1-May-20	to	30-Nov-20		214	days / year	
Summer Period 2	1-Mar-21	to	30-Apr-21		61	days / year	
			Total Contract Summer Days		**275**		
			Daily Cost:	$13,144.05			

Summer Class	Summer Yearly Rate / Lane Km	Summer Daily Rate / Lane Km
1	s.17; s.21	
2		
3		
4		
5		
6		
7		
8		

Winter Class	Winter Yearly Rate / Lane Km	Winter Daily Rate / Lane Km
A	s.17; s.21	
B		
C		
D		
E		
F		

ITEM			Daily Rate	Instruction Required:	Units
	Rest Area - Class	**A**	s.17; s.21	contact HQ	each
	Rest Area - Class	**B**		contact HQ	each
	Rest Area - Class	**C**		contact HQ	each
	Rest Area - Class	**D**		$0.00	each
		Bridge Deck		s.17;	sq. meter

APPENDIX A (TO SCHEDULE 10)

Service Area 5

Contract Year 2

Station Name	Station No.	Station Location	Annual Fee

AUTOMATED WEATHER STATIONS TOTAL FEE:	$0.00

Ministry of Transportation and Infrastructure

June 22, 2021

Capilano Highway Services Company
118 Bridge Road
West Vancouver, BC V7P 3R2

Changes to Schedule 8 ("Infrastructure") - Highway Maintenance Agreement for SA 05 dated May 01, 2019 between Her Majesty the Queen in right of the Province of British Columbia, represented by the Minister Responsible for the Transportation Act (the "Province") and Capilano Highway Services Company (the "Contractor") (together, the "Parties") (the "Agreement")

Dear Mr. Drummond:

Further to Amending Agreement #2, dated for reference the 15th day of December 2020, the Ministry wishes to extend the deadline for corrections to Schedule 8 for the omitted Infrastructure from the Commencement Date of the Agreement.

A revised Schedule 8 and all supporting calculations of the difference in value to the First Year Annual Price will be produced by the Province on or before October 15, 2021 and delivered to the Contractor on or around that time.

In addition, corrections to the Annual Price for Year 2 and Year 3 will be made based upon the corrected value of the Annual Price for Year 1. Supporting calculations will be provided as well.

For greater clarity, the Province will complete the Year 3 annual adjustment immediately and make the required adjustments once the corrected First Year Annual Price is determined.

Please contact me at 250-420-6548 or Jason.Templeton@gov.bc.ca if you have any questions.

Yours truly,

Recoverable Signature

X

Jason Templeton
Manager Maintenance Programs
Signed by: jason.templeton@gov.bc.ca

Copy: District Manager
District Operations Manager
Maintenance Contracts Coordinator, Rehab and Maintenance Branch
Ministry Solicitor, Legal Services Branch, Ministry of Attorney General

Ministry of Transportation and Infrastructure

Mailing Address:
PO Box 9850 Stn Prov Govt
Victoria BC V8W 9T5

Telephone: 778-974-5360
Facsimile: 250-356-7276

Location:
940 Blanshard Street
Victoria BC V8W 3E6

www.gov.bc.ca/tran

Ministry of Transportation and Infrastructure

SCHEDULE "6" ANNUAL ADJUSTMENT PROCESS NOTICE

September 13, 2021

Capilano Highway Services Company
118 Bridge Road
West Vancouver, BC V7P 3R2

Attention: **Steve Drummond**

Re: Highway Maintenance Agreement Service Area No**. 05** between HER MAJESTY THE QUEEN IN RIGHT OF THE PROVINCE OF BRITISH COLUMBIA, represented by the Minister Responsible for the Transportation Act (the "Province") and Capilano Highway Services Company**,** (the "Contractor") dated **May 1, 2019** (the "Agreement")

Pursuant to Section 3 of Schedule "6" of the Agreement, the Province hereby delivers the following calculations to be implemented for **Contract Year 03:**

1. Revised Unit Prices and Total Lump sum Value to Quantified Maintenance Services (Schedule "2");
2. Daily and yearly Rates for Changes to Infrastructure (Schedule "7");
3. Automated Weather Stations Fee (Schedule "10");
4. Adjusted Annual Price (Schedule "6")

The Adjusted Annual Price, as calculated in accordance with the Annual Adjustment Process, is **$4,852,501.**

The calculations of the foregoing are attached as required by Schedule 6 Section 4, and the following appendices are revised and delivered in accordance with Schedule 6 Section 6: Appendices A of Schedule 2 ("Quantified Maintenance Services"), Schedule 7 ("Rates for Changes to Infrastructure") and Schedule 10 ("Automated Weather Station").

Thirty days following receipt, this Annual Adjustment Process will be final and binding and will be effective commencing on and including **May 1, 2021.**

Please acknowledge receipt of the Schedules as indicated below and return a copy of this Notice to the attention of the writer on or before **October 4, 2021.**

District Manager, Transportation
Ministry of Transportation and Infrastructure

Acknowledged receipt and consented this 24 day of September, 2021

Capilano Highway Services Company
Duly Authorized Signatory

Copy: Bonding Company
Manager, Maintenance Agreements (Maintenance.Programs@gov.bc.ca)
Ministry Solicitor, Legal Services Branch, Ministry of Justice and Attorney General
Regional Director

SA05 Year 2 Annual Adjustment Price Calculation (in Preparation for Year 3)

Price Index Adjustment Factor Calculation

Index	2019	2020	% Change	% Weighting	Inflation
Labour Index	152.79	160.09	4.78%	47.0%	2.2456%
Fuel Index	136.93	114.49	-16.39%	8.0%	-1.3110%
Residual Index	109.73	110.53	0.73%	38.0%	0.2770%
				Price Index Adjustment	1.2116%
				Price Index Adjustment Factor (rounded)	1.01212

Adjust Annual Price Calculation
[(A-i) x B x C] +i +/- D +/- E

A	Annual Price for Immediately Preceding Contract Year Plus/Minus special agreements (if applicable)	$ 4,797,576.95	$	4,797,576.95
i	Less: Insurer Premium Quote (Yr 2)		$	s.17; s.21
B	Multiply by: Changes to Infrastructure Adjustment Factor (Art 6)			1.00000
C	Multiply by: Price Adjustment Factor			1.01212
i	Add Back: Insurer Premium Quote (Yr 2)		$	s.17; s.21
	New Insurance Premium Quote (Yr 3) *less previous year's premium* Difference	$ s.17; s.21 $ $		
D	Plus/Minus: 80% of difference		$	s.17; s.21
E	Changes to Maintenance Services Value (Art 7)			0.00000
	Annual Adjusted Price for Year 3		**$**	**4,852,501.03**
	Annual Adjusted Price for Year 3	**ROUNDED**	**$**	**4,852,501**

SCHEDULE "2"

QUANTIFIED MAINTENANCE SERVICES PLAN FRAMEWORK

Contract Year 3

Maintenance Specification	Quantified Maintenance Services	Activity Number	Unit of Measure	Quantities for Unit Price Items	Unit Price	Lump Sum Value	Total
Asphalt Pavement Maintenance	Overlay Patch	101300	tonne	s.17; s.21			s.17; s.21
	Overlay Patch - Isolated	101301	tonne				
	Overlay Patch (handwork)	101302	tonne				
	Overlay Patch - Isolated (handwork)	101303	tonne				
	Replacement Patch	101304	tonne				
	Replacement Patch (handwork)	101305	tonne				
	Spray Patching	101306	litre				
	Spray Patching - Isolated	101307	litre				
	Crack Sealing	101308	litre				
	Crack Filling	101309	litre				
Surface Treatment	graded aggregate seal	102300	m2				
	graded aggregate seal - Isolated	102301	m2				
	sand seal	102302	m2				
Highway and Shoulder Grading and Re-shaping	Grading	103300	rd km				
	Grading (Re-shaping)	103301	rd km				
	Shoulder Grading	103302	sh km				
	Shoulder Grading (Re-shaping)	103303	sh km				
Dust Control and Base Stabilization	dust control	104300	litre				
	Base Stabilization	104301	litre				
Surface and Shoulder Gravelling	surface gravelling – crush	105300	m3				
	surface gravelling – crush - Isolated	105301	m3				
	surface gravelling - pit run	105302	m3				
	surface gravelling - pit run - Isolated	105303	m3				
	Shoulder gravelling - crush	105304	m3				
	Shoulder gravelling - crush - Isolated	105305	m3				
	Shoulder gravelling - pit run	105306	m3				
	Shoulder gravelling - pit run - Isolated	105307	m3				
Road Base Maintenance	repair	106300	m3			LS	
Surface Cleaning	remove Accumulations (barrier)	107300	lin m				
	remove Accumulations (additional)	107301	sh km				
Cattle Guard System Maintenance	replace, new, elevation correction	109300	ea			LS	
Raised Hard Surfaced Infrastructure and Safety Device Maintenance	barrier cable - replace	110300	lin m				
	barrier cable - new	110301	lin m			LS	
	barrier concrete - replace	110302	ea				
	barrier concrete - new	110303	lin m			LS	
	barrier steel - replace	110304	lin m				
	barrier steel - new	110305	lin m			LS	
	traffic island - replace	110306	m2			LS	
	traffic island - new	110307	m2			LS	
	curb asphalt - replace	110308	lin m				
	curb asphalt - new	110309	lin m				
	curb concrete - replace	110310	lin m				
	curb concrete - new	110311	lin m				
	impact attenuator - replace, new	110312	ea			LS	
	anti-glare - replace, new	110313	ea			LS	
	sidewalks - replace	110314	ea			LS	
	pedestrian paths - replace, new	110315	ea			LS	
	spillways - replace, new	110316	ea			LS	
Ditch Maintenance	0 - 30 kms one way haul distance	201300	lin m				
	31 - 60 kms one way haul distance	201301	lin m				

SCHEDULE "2"

QUANTIFIED MAINTENANCE SERVICES PLAN FRAMEWORK

Contract Year 3

Maintenance Specification	Quantified Maintenance Services	Activity Number	Unit of Measure	Quantities for Unit Price Items	Unit Price	Lump Sum Value	Total
	61 - 100 kms one way haul distance	201302	lin m	s.17; s.21			s.17; s.21
	new construction, repair embankments/ back slopes, widen/deepen collection areas	201303	lin m			LS	
	remove localized minor rock	201304	m3			LS	
	side casting	201305	lin m				
Drainage Appliance Maintenance	removal of Debris/obstructions	202301	ea			LS	
	culvert install (to 400mm) max. 2m height of cover	202302	lin m				
	culvert install (401mm to 600mm) max. 2m height of cover	202303	lin m				
	culvert install (601mm to 1200mm) max. 2m height of cover	202304	lin m				
	culvert install (to 2999mm)	202305	lin m			LS	
	Flume install (to 2999mm)	202306	lin m			LS	
	re-setting, repair, replace and new other Drainage Appliances	202307	ea			LS	
	boring, auguring, pushing, installing inserts	202308	lin m			LS	
	install Rip-rap or other suitable material	202309	m3			LS	
	Trash Racks - clean	202310	m3				
	Trash Racks - repair	202311	ea			LS	
	Trash Racks - replace, new	202312	ea			LS	
	catch basin install (metal, concrete)	202313	ea			LS	
Shore, Bank and Watercourse Maintenance	removal of Debris/obstructions, provide catchment areas	203300	m3			LS	
	install Rip-rap or other suitable material	203301	m3			LS	
Vegetation Control	cut vegetation (Shoulder top and 0 - 1.8m)	401300	sh km				
	cut vegetation (Rest Areas/other specified locations)	401301	m2				
	cut vegetation (Raised Hard Surfaced Infrastructure)	401302	m2				
Brush, Tree and Danger Tree Removal	brushing (machine)	402300	sh km				
	brushing (hand cutting)	402301	m2			LS	
	brushing (hand cutting individual tree), Danger Tree removal, overhanging trees/limbs	402302	ea			LS	
Fence Maintenance	Schedule 1 and 2 fences - temporary repairs	405300	lin m				
	Schedule 1 and 2 fences - permanent repairs	405301	lin m				
	Specialty Fences - temporary and permanent repair, new	405302	lin m			LS	
Roadside Catchment Appurtences Maintenance	repair, replace	406300	ea			LS	
	crack seal/repair	406301	litre			LS	
	rock/sediment/Debris removal	406302	m3			LS	
	relief well - clean	406303	ea			LS	
Sign System Maintenance	delineator system install - plastic post/ fibreglass post, telspar, u channel post, Shoulder mount	501300	ea			LS	
	delineator install - barrier, top mount or side mount, W055, shoulder mount	501301	ea			LS	
	1 post Sign System install (< 1.09 m2)	501302	ea				
	1 post Sign System install (> 1.09 m2)	501303	ea				
	2 post Sign System install (< 3.2 m2)	501304	ea				
	2 post Sign System install (> 3.2 m2)	501305	ea				
	3 post Sign System install - (< 10.1 m2)	501306	ea				
	3 post Sign System install - (> 10.1 m2)	501307	ea				
	Sign install (< 1.09 m2)	501308	ea				
	Sign install (1.1 m2 to 3.2 m2)	501309	ea				
	Sign install (3.3 m2 to 7.1 m2)	501310	ea				
	Sign install (7.2 m2 to 10.1 m2)	501311	ea				
	Sign install (> 10.1 m2)	501312	ea				
	Sign Face Overlay install (< 1.09 m2)	501313	ea				
	Sign Face Overlay install (1.1 m2 to 3.2 m2)	501314	ea				
	Sign Face Overlay install (3.3 m2 to 7.1 m2)	501315	ea				
	Sign Face Overlay install (7.2 m2 to 10.1 m2)	501316	ea				
	Sign Face Overlay install (> 10.1 m2)	501317	ea				

SCHEDULE "2"

QUANTIFIED MAINTENANCE SERVICES PLAN FRAMEWORK

Contract Year 3

Maintenance Specification	Quantified Maintenance Services	Activity Number	Unit of Measure	Quantities for Unit Price Items	Unit Price	Lump Sum Value	Total
Temporary Pavement Markings and Eradication	restore or new temporary pavement markings	502300	line km	s.17; s.21			s.17; s.21
	restore or new temporary pavement markings	502301	m2				
	eradicate temporary pavement markings	502302	line km				
	eradicate temporary pavement markings	502303	m2				
	eradicate permanent pavement markings	502304	line km				
	eradicate permanent pavement markings	502305	m2				
Bridge Deck Maintenance	timber Re-decking (Minor)	601300	m2				
	timber Re-decking (Major)	601301	m2				
	linseed oil/mineral spirit treatment	601302	m2				
	concrete repair	601303	m3				
	crack seal	601304	lin m				
	crack repair	601305	lin m				
Bridge Joint Maintenance	Bridge Joint Armour and Joint seal replace	604300	lin m				
Bridge Bearing Maintenance	Bridge Bearing and components replace	605300	ea			LS	
Structure Minor Coating	steel/timber surfaces, steel/timber rail systems	607300	m2			LS	
Concrete Structure Maintenance	concrete repair, crack seal/repair	608300	m3			LS	
Bridge Piling Maintenance	replace	610300	ea			LS	
Retaining Wall Maintenance	Retaining Wall and components - repair, replace	611300	m2			LS	
Timber Truss Bridge Maintenance	Truss Rods, Lateral Rods, End Posts, Main Braces, Counter Braces, Floor Beams, Corbels - replace	613300	ea			LS	
	Truss Rods or Camber - adjust	613301	ea			LS	
Timber and Log Bridge Maintenance	components - replace	614300	ea			LS	
LAS - Invasive Plants Management	seeding	913300	m2			LS	
LAS - Pavement Surface Reflectors	replace, new	917300	ea			LS	
LAS - Highway Crossing Infrastructure	surface repairs	911300	m3			LS	
LAS - Wildlife Exclusion System Maintenance	repairs	925300	ea			LS	
	brush removal	925301	m2				
	height restoration	925302	ea			LS	
LAS - Sound Wall Maintenance	Sound Wall and components - repair, replace	923300	m2			LS	
TOTAL VALUE OF UNIT PRICE ITEMS							
TOTAL LUMP SUM VALUE							
TOTAL VALUE OF QUANTIFIED MAINTENANCE SERVICES							**$2,970,813.83**

Contract Year	**3**			**Service Area**	5		**Instruction #**
	Start Date	01-May-21	**End Date**	30-Apr-22		**Days in Year**	**365**
			Total Contract Days		**365**		
Winter Period 1	1-Dec-21	to	28-Feb-22		90	days / year	
Winter Period 2		to				days / year	
			Total Contract Winter Days		**90**		
Summer Period 1	1-May-21	to	30-Nov-21		214	days / year	
Summer Period 2	1-Mar-22	to	30-Apr-22		61	days / year	
			Total Contract Summer Days		**275**		
			Daily Cost:	$13,294.52			

Summer Class	Summer Yearly Rate / Lane Km	Summer Daily Rate / Lane Km
1	s.17; s.21	
2		
3		
4		
5		
6		
7		
8		

Winter Class	Winter Yearly Rate / Lane Km	Winter Daily Rate / Lane Km
A	s.17; s.21	
B		
C		
D		
E		
F		

ITEM			Daily Rate	Instruction Required:	Units
	Rest Area - Class	**A**	s.17; s.21	contact HQ	each
	Rest Area - Class	**B**		contact HQ	each
	Rest Area - Class	**C**		contact HQ	each
	Rest Area - Class	**D**		$0.00	each
			Bridge Deck	s.17; s.21	sq. meter

APPENDIX A (TO SCHEDULE 10)

Service Area 5

Contract Year 3

Station Name	Station No.	Station Location	Annual Fee

AUTOMATED WEATHER STATIONS TOTAL FEE:	**$0.00**

AMENDING AGREEMENT #3
Service Area 5

THIS AMENDING AGREEMENT dated for reference the 1st day of July 2021 (the "Reference Date")

BETWEEN

HER MAJESTY THE QUEEN IN RIGHT OF THE PROVINCE OF BRITISH COLUMBIA, as represented by the **Minister Responsible for the Transportation Act**

(the "Province")

AND

CAPILANO HIGHWAY SERVICES COMPANY

(the "Contractor")
(together, the "Parties")

WHEREAS

A. The Parties entered into an agreement entitled "Highway Maintenance Agreement Service Area 5" dated for reference the 1st day of May, 2019, as amended.

B. The Parties wish to amend the Highway Maintenance Agreement on the terms and conditions set out in this Amending Agreement.

NOW THEREFORE in consideration of the premises and the covenants and agreements set out in this Amending Agreement and for other good and valuable consideration (the receipt and sufficiency of which is hereby acknowledged by the Parties), the Parties agree as follows:

1. In this Amending Agreement, unless the context otherwise requires,
   a) "Highway Maintenance Agreement" means the agreement dated for reference the 1st day of May, 2019 between the Parties, as amended; and

   b) Any word having initial uppercase letter have the meaning ascribed to them in the Highway Maintenance Agreement.

2. Effective as of July 1 2021, Appendix A to Schedule "2" ("Quantified Maintenance Services Plan Framework") of the Highway Maintenance Agreement is hereby revised to reflect the following addition(s):

Maintenance Specification	Quantified Maintenance Services	Activity Number	Unit of Measure	Quantities for Unit Price Items	Unit Price	Lump Sum Value	Total
Sign System Maintenance	Sign install (ministry-supplied materials)	501318	ea	LS	LS	LS	LS
Bridge Joint Maintenance	Bridge Joint seal replace	604301	lin m	LS	LS	LS	LS

3. A revised Appendix A to Schedule "2" will be provided with the next annual adjustment package.

4. The Parties acknowledge and agree that there are no amendments to either the Local Area Specifications or General Specifications by the changes specified in Section 2 above.

5. Schedule 6 ("Annual Adjustment Schedule") is hereby amended by:

   a) the deletion of the definition of "Fuel Component" in Subsection 1.1(d) and the following substituted therefor:

      "Fuel Component" means the portion of price assumed to represent fuel costs, measured using the Annual Average of Industry Price Indexes for Diesel Fuel at self service filling stations, Vancouver BC, Monthly, available from Statistics Canada Table No. 18-10-0001-01 in respect of a calendar year, or, if not available, such other similar index selected by the Province after consultation with B.C. Road Builders and Heavy Construction Association. The Province shall, on or around April of each Contract Year, calculate the year over year percentage change for the Fuel Component of the Price Adjustment Factor, using the data from the preceding 2 calendar years pursuant to the illustration in Appendix C of this Schedule;

   b) the deletion of the definition of "Labour Component" in Subsection 1.1(f) and the following substituted therefor:

      "Labour Component" means the portion of the Annual Price assumed to represent labour costs, measured using the Annual Average of the Fixed-weighted Index of Average Hourly Earnings for all employees (SEPH), excluding overtime, unadjusted for seasonal variation, for selected industries classified under the North American Industry Classification System (NAICS); British Columbia; Industrial Aggregate excluding unclassified businesses available from the CANSIM database and made available by Statistics Canada in Table 281-0039 in respect of a calendar year, or, if not available, such other similar wage index selected by the Province after consultation with B.C. Road Builders and Heavy Construction Association. The Province shall, on or around April of each Contract Year, calculate the year over year percentage change for the Labour Component of the Price Adjustment Factor, using the data from the preceding 2 calendar years pursuant to the illustration in

Appendix C of this Schedule. The labour index is applicable to the annual highway adjustment calculation in Section 2 only where the year over year percentage change is nil or a positive number;

6. The Contractor will advise its insurer(s) and its sureties of the changes agreed to in this Amending Agreement in writing.

7. Time will be of the essence of this Amending Agreement and remain of the essence of the Highway Maintenance Agreement, as amended by this Amending Agreement.

8. The terms, representations and warranties of the Highway Maintenance Agreement, as amended by this Amending Agreement, are ratified and confirmed, and all other terms, representations and warranties of the Highway Maintenance Agreement are to remain in full force and effect.

9. If any term of this Amending Agreement or the application thereof to any person or circumstance is invalid or unenforceable to any extent, the remainder of this Amending Agreement and the application of such provision to any other person or circumstance will not be affected or impaired thereby and will be valid and enforceable to the extent permitted by law.

10. This Amending Agreement will be interpreted according to the laws of the Province of British Columbia.

11. This Amending Agreement constitutes the entire agreement between the Parties and no understanding or agreement, oral or otherwise, exists between the Parties with respect to the subject matter of this Amending Agreement except as set out in this Amending Agreement and this Amending Agreement may not be modified except by subsequent agreement in writing between the Parties.

12. This Amending Agreement may be executed in counterpart and such counterparts together shall be effective to constitute a single instrument. Delivery of an executed counterpart of this Amending Agreement by electronic means, by way of a manually handwritten signature provided in a PDF format, shall be equally effective as delivery of a manually handwritten hardcopy original.

IN WITNESS WHEREOF the Parties have executed this Agreement by their duly authorized representatives or officers as follows:

SIGNED on behalf of **Her Majesty the Queen in Right of the Province of British Columbia** by a duly authorized representative of the Minister Responsible for the Transportation Act on the 8 day of November, 2021

For the Minister Responsible for the Transportation Act

SIGNED on behalf of **Capilano Highway Services Company** by a duly authorized representative of the Contractor on the 29 day of OCT, 2021

Name: STEVEN DRUMMOND

Title: PRESIDENT

Ministry of Transportation and Infrastructure

Background Information for Resolution #Project Office Use Only

Surface Maintenance – Pavement Surface Cleaning Maintenance 1-180

DATE: July 22, 2016

WORKING GROUP: Surface Maintenance

RELEVANT MAINTENANCE SPECIFICATION:
1-180 Pavement Surface Cleaning Maintenance

BACKGROUND

In the 03-04 Agreement the Maintenance Contractors are responsible cleaning Pave Surfaces a minimum of 120 days. There are a number of Service Areas in the southern part of the Province that rely on this clause.

ISSUE OVERVIEW

Under the terms of the 2003 Maintenance Agreement Specifications the Minimum Pavement Surface Cleaning Frequency for four lane and Urban Highways is for 120 Day. The Maintenance Spec for SA 11 removed the 120 day Minimum.

ISSUE #1

Some Service Areas have problems enforcing their Contractors to clean the pavement surfaces more than once a year unless it is a request because of a special event. This creates issues and complaints from some of the road users, specifically motor bikes / cyclists, saying the road surfaces are unsafe.

Recommended Solution:

- Would like to see the Ministry increase Quantified Plan for additional Surface Cleanings in areas where the 120 day minimum is an issue and allow the Ministry to work with the Contractor to determine a schedule based on need.

Pros:

- The Ministry will have better control where extra surface cleaning is needed
- Should be price neutral from existing contracts
- The current 120 day minimum includes all lanes which is rarely required. Increased flexibility to deal with the areas of concern.

Cons:

- Contractor may have to alter their planned activities
- Weather changes

MINISTRY AND STAKEHOLDER FEEDBACK

- As Motorcycle/ cyclist usage is on the rise, the Ministry will not be tied to the 120 day minimum, as cleaning would be done as needed.

TECHNICAL ADVISORY COMMITTEE FEEDBACK

- Clarify what is expected of the contractor for monitoring. – *Resolution revised to clarify the Ministry's expectations. See issue #2.*]

PREPARED BY:

Team Lead

Consultant/SME

REVIEWED BY:

First Name Last Name, Title
Project Team

First Name Last Name, Title
Technical Advisory Committee (TAC)

Ministry of Transportation and Infrastructure

Background Information for Resolution #Project Office Use Only

Surface Maintenance – Pavement Surface Cleaning Maintenance 1-180 #2

DATE: July 22, 2016

WORKING GROUP: Surface Maintenance

RELEVANT MAINTENANCE SPECIFICATION:
1-180 Pavement Surface Cleaning Maintenance

BACKGROUND

Under the terms of the 2003 Maintenance Agreement Specifications under section 3.1.a) the Spec reads "clean Hard Surfaced Highways……" and under 3.1.1 a) the Spec reads "clean Hard Surface Highways in accordance with the frequencies established in the following table.".

ISSUE OVERVIEW

The Spec refers to Hard Surface Highways and in some areas the Contractor cleans the Hard Surface Highways, but does not clean *All* Hard Surfaced Highways each spring.

Recommended Solution:

- Would like to see *ALL* added before Hard Surface Highways.

Pros:

- The Contractors would have to ensure all hard surfaced roads are cleaned of winter sand, providing all road users a safe, clean driving surface
- Less complaints to the Contractor and the Ministry

Cons:

- Contractor would have to ensure they have the resources and have their scheduling in order to address all roads, not just select areas.
- Their bid price may reflect the Ministry's Spec intention

MINISTRY AND STAKEHOLDER FEEDBACK

- The Ministry will notice the decrease in customer complaints.
- Hard Surface is currently defined as "all roads that are not gravel or dirt." Purpose of bring this to TAC is to confirm this is the Ministry's expectation that all hard surfaces are cleaned each year. If not the spec needs to be revised to reflect the Ministry's expectation with regard to sweeping.

TECHNICAL ADVISORY COMMITTEE FEEDBACK

- Clarify what is expected of the contractor for monitoring. – *Resolution revised to clarify the Ministry's expectations. See issue #2.*]

PREPARED BY:

Team Lead

Consultant/SME

REVIEWED BY:

First Name Last Name, Title
Project Team

First Name Last Name, Title
Technical Advisory Committee (TAC)

Highway Maintenance Contract Renewal

Resolutions for Surface Maintenance

November 4, 2016

Intro & Background

- Working Group
- Followed a process
- Continued philosophy of Previous Maintenance Agreements as well as leading into the new SA11 Agreement
- Work to a goal of bringing forward a mind set of surface preservation, both in the Ministry as well as the Contractors.
- Recommendations

Intro & Background

- Working Group reviewed the following specifications:
  - 1-100: Patching & Crack Sealing
  - 1-110: Highway Surface Treatment
  - 1-130: Gravel Highway & Shoulder Grading and Re Shaping
  - 1-140: Dust Control & Base Stabilization
  - 1-150: Highway Surface & Shoulder Gravelling
  - 1-180: Surface Cleaning
  - 1-190: Debris Removal
  - 1-200: Cattle Guard Systems
  - 1-220: Curb, Island, Barrier & Safety Device Maintenance
  - 1-230: Railway Crossing Maintenance
  - New 1-185: Bicycle Path & Pedestrian Walkway Maintenance

Intro & Background

- Group members:

  Danny Morris (Ops Manager Vernon), Don Legault (Ops Manager Lower Mainland), Tim Meszaros (Geo Tech Paving Design Engineer Region 3), Caitlin Dobson (Area Manager Smithers), Nathan Voogd (Area Manager Terrace), Scott Laine (Area Manager Kelowna), Leanne Ilnicki (Area Manager Bella Coola)

- Team Consultants

  Grant Lachmuth (Urban Systems), Larry Rowe (LJ Rowe Consulting)

- Team Lead

  Karen Andrews (Ops Manager Prince George)

Overall Conclusions – Surface Maintenance

- Generally, the 03/04 spec working well
- Consistent format needed throughout the specs
- Clearer language needed indicating obligations for Routine and Quantified
- Adjustment to language to ensure level of service is clearly defined
- Consistency in performance time frames
- Suggesting changes with the goal of having contractual cost savings, cost neutral or a very small increase, by finding efficiencies or by reducing Contractors risks.
- Recommend using the updated SA11 specs format with some changes

Maintenance Spec Changes Taken to TAC

- **1-100 Patching & Crack Sealing**
- **1-140 Dust Control**
- **1-140 Base Stabilization**
- **1-180 Pavement Surface Cleaning**
- **1-185 Bicycle Path & Pedestrian Walkway Maintenance**
- **1-200 Cattle Guard System Maintenance**
- **1-220 Curb, Island, Barrier Maintenance and Safety Devices Specifications**
- **1-230 Railway Crossing Maintenance**

1-100 Patching & Crack Sealing

ISSUE

SA 11 2015 Contract has Overlay and Replacement patching list as quantified activities at a unit price bid, which we support, but need flexibility for increase costs associated with isolated areas, so contractors are fairly compensated for the significant costs that can be associated with this work and Ministry staff is not put in a position to have to negotiate these costs. Providing an "Isolated Patching Option" compensated at lump sum reduces risk for the contractor.

Recommended Solution:

Create Isolated Permanent Patch activity as a Lump Sum (Schedule 5).

New Definition describing Isolation as anywhere greater than 60 kms from the nearest Asphalt Plant and/ or a location accessed by ferry or barge.

Concept and definition supported by TAC.

1-140 Dust Control

ISSUE 1

The current standard of a swath down the middle of the road, with the minimum width determined by the class of the road which does not eliminate the dust issue complaints from home owners or farmers and in some cases still causes road conditions to be unsafe. Variation of constructed road widths around the Province make the standard width application ineffective in some cases.

Recommended Solution:

All dust control applied from an offset of 1 meter from the shoulder of the road, the same width as Base Stabilization (Sect. 3.2 b). The spec would then read *carry out dust control by treating the entire Dirt and Gravel Highway surface, except for one meter on each side, not less than 3 meters in width. Dust site lengths would be determined by the table (as current).*

Anticipating there is going to be some increase in cost associated with the increased application width and additional product, however Dust Control is a quantified activity and it expected that the contractor can prioritize and the overall quantity can be managed within the value of the quantified plan.

1-140 Dust Control (cont'd)

ISSUE 2

Under the 03-04 Contract Sect. 3.2 Quantified Maintenance Services c) Table (F) Highways with 40 or more commercial and industrial type vehicles per day with 3 or more axles (Classes 3and 4) will receive dust control the entire length.

40 commercial vehicles is quite low and equals to 4 vehicles per hour and routes can change from year to year, leaving some risk to the Contractor that they will have incorporate roads into their quantified plan whenever industry changes that they may not have been expecting.

Recommended Solution

Suggest breaking this Spec into two sections:

Part 1: for roads with between 40 – 100 commercial or industrial vehicles per day, dust control for all classes to read hills over 5%, curves, intersections, bridge approaches and along lakes and rivers.

Part 2: for roads with over 100 commercial or industrial vehicles per day, complete entire travelled lane (all classes).

Consideration should be taken into account the duration of the haul.

1-140 Base Stabilization

General

Support the language changes and clarification of activities included in base stabilization as per SA 11.

Issue 1

The current standard of indicating a specific time frame for the warranty and written within the Maintenance Specification needs to continue. However, there is currently no definition of the end product for base stabilization so it is difficult to enforce warranty. Further, minimum application rates are not identified, so there is no differentiation between Dust Control and Base Stabilization application rates.

Recommended Solution

End Product for Base Stabilization defined and application rate defined (as per industry standards.)

Adjust the warranty period be 120 days or freeze up. (Alternately keep the existing 365 day warranty period.)

Add a definition for base stabilization.

1-185 Bicycle Path & Pedestrian Walkway Maintenance

New Spec
Alternate modes of travel are becoming more popular as society becomes more aware of their carbon foot print as well as their health.

Maintenance activities related to bike paths and pedestrian walkways are covered off in number of sections throughout the specification, but we felt because of the importance, this topic should have its own specification.

Recommendation
Consolidate the existing specifications relating Bicycle Paths and Pedestrian Walkways into one specification.

It will highlight the importance of these maintenance activities and make it easier for Ministry staff and Contractors to follow the maintenance requirements.

1-230 Railway Crossing Maintenance

ISSUE

Currently, the Maintenance Contractors process and pay invoices for improvements/ repairs at rail crossings where the rail company is senior. The costs can fluctuate and often come with little notice to the contractors.

The cost to the Ministry for Crossing Maintenance is estimated around $1.5 million per year (calculated by Ministry staff based on average costs and life cycle management of the infrastructure.) This does not include the risk that the Contractors have built into the contracts nor does it include the Ministry assisting with the higher cost invoices or upgrades to a crossing.

In SA11 the payment of rail crossing invoices remained routine, but was placed under the Routine Maintenance Services Cap with a cap value of $100,000. The high CAP value could transfer substantial risk onto the contractor to cover all associated costs.

Recommended Solution:

The Routine Service Cap is adopted for the new contracts with a CAP limit of $30,000.

If there are savings from reduced risk in the contract, perhaps some of those saving could be provided to headquarters to assist the Districts with invoice costs above the CAP limit. This could be managed out of headquarters.

Ministry of Transportation and Infrastructure

2018–2019 Highway Maintenance Contract Renewal

Draft Resolution of the Project Board #17

WHEREAS:

A. The Surface Maintenance Working Group identified issues in the 2003-04 Highway Maintenance Agreements and/or the 2016 Service Area 11 Agreement.

B. The Surface Maintenance Working Group proposed solutions to the issues they identified ("Recommended Solutions").

BE IT RESOLVED THAT:

1. The 2018-19 Highway Maintenance Agreements be developed to include the following Recommended Solutions:

a. Maintenance Specification 1-100 Patching & Crack Sealing: Create Isolated Permanent Patch activity as a Lump Sum item in Schedule 5 of the Agreement, and add a new definition describing isolation as anywhere greater than 60kms from the nearest Asphalt Plant and/or a location accessed by ferry or barge.

b. Maintenance Specification 1-140 Dust Control:

i. All dust control applied from an offset of 1 meter from the shoulder of the road, the same width as Base Stabilization (Sect. 3.2 b). The spec would then read "*carry out dust control by treating the entire Dirt and Gravel Highway surface, except for one meter on each side, not less than 3 meters in width. Dust site lengths would be determined by the table"* (as current).

ii. Divide this specification into two sections:

Part 1: for roads with between 40 – 100 commercial or industrial vehicles per day, dust control for all classes to read hills over 5%, curves, intersections, bridge approaches and along lakes and rivers.

Part 2: for roads with over 100 commercial or industrial vehicles per day, complete entire travelled lane (all classes).

Consideration should be taken into account the duration of the haul.

c. Maintenance Specification 1-140 Base Stabilization:

i. Define the terms *Base Stabilization*, *End Product for Base Stabilization*, and *Application Rate* (as per industry standards.)

ii. Adjust the warranty period to 120 days or freeze up. (Alternately keep the existing 365 day warranty period.)

d. Create new Maintenance Specification 1-185 Bicycle Path & Pedestrian Walkway Maintenance:

i. Consolidates the existing specifications relating Bicycle Paths and Pedestrian Walkways into one specification.

ii. Highlights the importance of these maintenance activities and makes it easier for Ministry staff and Contractors to follow the maintenance requirements.

e. Maintenance Specification 1-230 Railway Crossing Maintenance:

i. The Routine Service Cap be adopted for the 2018/19 contracts with a CAP limit of $30,000.

ii. If savings result from reduced risk in the contract, suggest some of those saving could be provided to headquarters to assist the Districts with invoice costs above the CAP limit (to be managed by Ministry HQ).

DRAFT

This is a draft resolution and is prepared for the purpose of obtaining Project Board consent to proceed to stakeholder consultation on the issues outlined above. The Working Group will submit a final resolution for Project Board approval after completing stakeholder consultation and making any necessary changes, or as otherwise directed by the Project Board.

_____

Ian Pilkington, Project Director

Maintenance Contract Renewal Board of Directors
Meeting #22 – November 4, 2016

MINUTES

Project Board Members
Kevin Richter – Chair
Nancy Bain
Norm Parkes
Ashok Bhatti
Mike Lorimer
Scott Maxwell
Rodney Chapman

Project Board Delegates (if applicable)
Ellen Slanina

Project Team Members
Ian Pilkington – Project Director
Christina Klatt – Secretariat

Working Group Leads
Karen Andrews
Mike Kelly

22.1 Call to order and approval of agenda

- The meeting was called to order at 9:06am.
- The agenda was approved.

22.2 Approval of Meetings #19 & #20 Minutes

- Approved.

22.3 Action Items Status Update

- Approved.

PROJECT STATUS UPDATES

22.4 Resolution #17 – Surface Maintenance

- **ACTION ITEM 22.4.1 – Karen:** Patching & Crack Sealing - provide clarification of the lump sum model and further analysis on the distance to both permanent and temporary asphalt plants.
- **ACTION ITEM 22.4.2 – Karen:** Dust Control - provide additional cost analysis.
- **ACTION ITEM 22.4.3 – Karen:** Base Stabilization – further analysis of the application rate is required.
- **ACTION ITEM 22.4.4 – Karen:** Bicycle Path & Pedestrian Walkways - further detail is required regarding activities included in the new specification and the associated costs, if any.

- **ACTION ITEM 22.4.5 – Karen:** Railway Crossing Maintenance - further cost analysis of the routine maintenance services cap required.

22.5 Resolution #18 – Traffic Management & Sign Maintenance

- Approved.

NEW BUSINESS

22.6 Future Meetings/Housekeeping

- The next meeting will be held on November 14, 2016

22.7 Adjournment

- The meeting was adjourned at 12:57 pm.

Highway Maintenance Contract Renewal Project
PROJECT BOARD SUMMARY

Resolution #	ITEM	WORKING GROUP RECOMMENDATION / RESOLUTION	PROJECT BOARD FEEDBACK	BC ROADBUILDERS FEEDBACK	COST ($M)
23	**Local Area Specifications**	Wildlife exclusion fences: develop inspection and maintenance requirements. SA 21: South Taylor Hill winter maintenance/enhanced dust control. SA 22: Enhanced dust control. SA 23: Additional work for Germansen Landing Road. SA 14: Additional winter maintenance Coquihalla/rest area maintenance.	N/A	Is the Ministry going to be the purveyor of water under the Water Act at Rest Areas as it's the Ministry's water source? Invasive Plants/Noxious Weeds - Bagging and taking away invasive weeds is a new requirement which will have an associated cost. Is Ministry to consider making this a lump sum quantified item? Inspection Stations - Is Inspection Station defined anywhere? It is unclear whether the intent is for MC to clear the laneways in winter as well as the parking lots. RB's ask that we report back to them on this point. Making deals LAS's - MC's note that the cost of new LAS that are currently worked out through deals (e.g. South Taylor Hill) will need to be included in the upset price	2.3
18	**Traffic Management**	Amend traffic management specification to reflect the requirements of the new standard of traffic management as set out in the 2015 edition of the TMM.	The Board approved this resolution.	No concerns expressed, like the idea of a quick start guide. RB's would like an opportunity to review the quick start guide and provide feedback.	1.6
21	**Winter Maintenance**	For temperatures greater than -9 degrees C, require anti-icing and return time to bare pavement on Class A,B and C in 12,16 and 36 hrs respectively.	Provide cost/benefit analysis of anti-icing and de-icing at -9oC or greater. Determine if a sufficient supply of winter chemicals is available for the increase use expected across the Province. Provide further analysis on the determination of time to bare class A, B and C roads.		5.9
		Have same service level on all lanes of Class A highway.	Determine where savings are achieved to offset the cost of multi-lane plowing on all class A highways.	Not practical to have same level of service on all lanes, very expensive.	9.5
		Use interval times for Class A and B highways. Continue using max accumulation for Classes C,D and E.	The Project Board rejected the incorporation of interval times to measure snow removal. Revisit maximum accumulations.	All agreed circuit times can't be achieved on major routes and continue max accumulation on side roads without increasing fleets. Using circuit times is perscriptive, moving away from end product specs. Suggestion to reduce max accumulation on major routes to 3cm and reduce time to bare and wet (SA11 is 24 hours on Class A, reduce to 12 hours) and increase the funding. Measure max accumulation in the travelled lanes, not on shoulders, believe the measurement issue has been clarified with Ministry staff so don't feel it is a concern. Believe changing the existing requirements for max accumulation is the best way to get the performance Ministry wants. Continue with max accumulation; don't do circuit times.	~~8.1~~
		Incorporate key geographic locations as LAS.	Further information and analysis required of key geographic areas.		Nil
		When not possible through chemical or mechanical means to remove compact snow, contractor must manage compact and restore traction on polished compact as per SA 11 requirements.		Plan for freezing rain event in QMS, to be determined within the area (RB supportive of this)	Nil
		Adopt a name based classification system in relation to Class A-F.	Further information and analysis required on the winter classification system.	Currently have winter Class A highways that are not "primary" highways (e.g. ski hills). RB believe the classification definition should remain the same.	Nil
		Install 24 new RWIS stations and upgrade 41 existing stations to include optic sensors over 5 years.			
		Specify access during audits for various data collected using AVL: GPS location, road temperature, plow configuration and material application and type.	*NB: Remainder of proposed resolution items to be considered at Board Meeting on January 24th, 2017*		
9	**Roadside**	Litter: increase litter collection on lower class highways and decrease on higher class highways (as per table response times). Rest Area: adjust opening and closing dates from Easter to Thanksgiving Identify the need for preventative work, where required. Use SA 11 language so all rest areas receive the same level of service as Class A.	Board was in agreement with this resolution	Expressed concern that the public will notice reduced frequency of litter collection on any class roads if that's to be the trade-off in cost. Rest Area opening/closing dates – It was noted that, in some areas, opening on Easter may be too early as still experiencing winter weather. Concern expressed regarding maintaining all rest areas at a class A frequency. Want to maintain other rest areas at lower classes and lower frequencies – that's how it was priced and is being administered currently.	1.8

11	**Bridges and Structures**	Contractor bridge inspectors required to have equivalant training as Ministry, such as the bridge inspection course offered by BCIT. Contractor will have 2 years to complete. Contractor must routinely inspect retaining wall and ungulate guard structures. New and existing retaining walls and ungulate guards must be cleaned and washed.	Resolution was approved with the subject to the following: follow up request from board to provide a cost breakdown for washing of retaining walls and provide further information on the form of Bridge training or certification that would be required and further rational on if its necessity.	BCIT Qualifications - What happens if they are more qualified (like the Bridge Journeyman course)? Would BCIT be a minimum requirement? Will the contract say "…or equivalent training and experience"? They believed some MC's would take advantage of the BCIT course, if it was available. Currently, MCs are only able to attend the course but can't take the final exam or get the certificate. Asked Ministry to obtain further clarity around equivalent training and experience. Not signing off on structural condition, just reporting to the owners. MC's don't want to assess structural integrity (i.e. design and structure safety status), stated their insurance wouldn't cover this liability. MC's believe if they're not required to do more than what they're doing right now they don't need to be certified. Wash & Cleaning Structures - Recognize this will be an increased cost. Bridge rail as quantified activity - for Bridge WG to confirm. Metal bridge decking as quantified activity - Discussion around if damage occurred, would this be considered a major event with deductible.	0.5
22	**Gravel Pits / Salt sheds**	Gravel: increase gravel pit fee from $1.75m3 to $2.35m3 for both processed and unprocessed materials taken directly from pit face and incorporated into works fee for duration of contract rather than allow for annual increases. Salt Sheds: no new salt sheds allowed in Ministry pits now or in the next round. Existing salt sheds to be eliminated or removed from ministry working pits where possible.	Scheduled for Board meeting January 16th, 2017	Appreciate clarification and consistency on the salt sheds regarding replacement/ownership. Request Service Areas talk to local MC's when deciding to remove a salt shed from a pit (may be leasing yard so can't use salt shed).	0.3
2	**Communications**	Contractor to monitor social media platforms. Use of automated acknowledgement confirming receipt. Contractor to be proactive using social media. Contractor to have a presence and monitor 2 social media platforms.	Board agreed with this resolution. The Project Board asked that the resolution information be revised to outline a minimum of social media platforms to be monitored by the contractor and details be provided about websites which enable automated responses to comments.	Feel Drive BC should be 1 of the 2 social media platforms - believe this is duplication if they message incidents. Feel social media should be one way to communicate-prefer to streamline through their 1-800 number or website. Not supportive of 2 social media, just 1 and platform not specified in agreement.	nil
3	**Highway Safety Monitoring**	Remove "forecasted events" and relocate to winter specs. Revise summer classification to include periods of heavy rain with Environment Canada definition. Add requirement to document unsafe conditions found during monitoring not remedied immediately (7 days or less response time).	Board was in agreement with this resolution. The Project Board asked that the resolution background be revised to clearly differentiate between winter and all other highway patrols conducted throughout the year (newly titled "road safety monitoring"), to address when work identification reporting is required and include an appropriate response time for safety related issues.	Agreement in principle but felt more details were needed.	nil
4	**Highway Inspection**	Inspect all highway components in the first year. Inspect all drainage systems annually for structural integrity and water passage. Inspect safety devices annually to meet performance requirements. Inspect all remaining highway components within every 3 years.	Board was in agreement with this resolution. The Project Board asked that the resolution background be revised to outline the reporting requirements for deficiencies found during inspections.	No concerns were noted.	nil
10	**Major Event / Incident Response**	Deductible of $10,000 for all Major Events. All Major Events under $10,000 are Routine. For all major events exceeding $10,000 all costs over $10,000 are paid by ministry. The $10,000 paid by contractor contributes to the overal 2% annual cap.	Board was in agreement with this resolution	Good with both caps (Routine Maintenance Services and 2%). Concern expressed regarding wording to "make site safe" and if Ministry doesn't like MC's price, we can award to another company. But MC could spend up to the cap by keeping site safe. This is unethical in their view. Expressed some concern over the definition of a Major Event Site being 1km.	nil
8	**Drainage**	Make handwork routine, and machine work quantified. Ensure all performance time frames for all drainage specs consistent with tables in the 03/04 specification.	Board was in agreement with this resolution	None.	

17	**Surface Maintenance**	Pavement patching: create isolated permanent patch activity as a lump sum item in schedule 5 and add a new definition for isolation. Dust control: all dust control applied offset of 1 meter from shoulder of road (same as base stabilization): a) for roads between 40-100 industrial vehicles/day dust control for all classes to read hills over 5%, curves, intersections bridge approaches; b) road over 100 industrial or commercial vehicles/day, complete entire travelled lane. Base stabilization: define the terms for base stab end product and application rate adust the warranty period to 120 days or freeze up. Bicycle path and pedestrian walkway: create new specification. Railway crossing maintenance: provide a cap of $35,000.	Patching & Crack Sealing - provide clarification of the lump sum model and further analysis on the distance to both permanent and temporary asphalt plants. Dust Control - provide additional cost analysis. Base Stabilization – further analysis of the application rate is required. Bicycle Path & Pedestrian Walkways - further detail is required regarding activities included in the new specification and the associated costs, if any. Railway Crossing Maintenance - further cost analysis of the routine maintenance services cap required	Include definition of "isolated" in the agreement. Do you need to take a ferry? Distance from the closest plant? Supportive of moving into lump sum (i.e. isolated perm patch). Re-iterated support for a bitumen index. MCs haven't received any complaints regarding width for dust control. Emphasised that reducing frequency of dust control on lower class roads will lead to complaints from the public. Railroad crossing: Requested the language in the agreement outline that work to be done by the MC is maintenance only (vs. wholesale upgrades which the railway views as maintenance). National Transportation Safety Board has definition of "maintenance" on these items; we should mirror. Inquired about NTSB definition. RB's agree with $35,000 maintenance cap for railway crossing maintenance, to match bridges and structures. MC's believe the $100,000 cap in SA11 is too high.	nil
12	**Technology-GPS and AVL**	Adopt AVL technology subject to legal review of data issues. Contractors will have 12 month grace period to equip vehicles with AVL technology from start of contract. Develop a minimum specification to describle suitable AVL technology for contractors. Coordinate with Drive BC developers to enable a product to support AVL data for internal use. AVL not to be published externally without executive approval.	The Project Board was supportive of further exploration into the incorporation of AVL in the Highway Maintenance Agreements. request to provide further information about the following: o Data collection, ownership and storage o Incorporation into Drive BC o Cost-benefit analysis o Grace period for contractor's to adopt o Evaluation during procurement	Feel it's a cost item. Concerned where no GPS service in some locations, and how would this be addressed. Would GPS data be manually entered in areas with no satellite access? Would like to be involved with further discussion or updates on this initiative. Ditching, mowing, brushing not as simple to collect as GPS unit not mounted on a truck. Concerned this will encourage Ministry staff to stop going in the field. Willing to make AVL data/view of plows available as an audit tool for ministry. Ministry can go into MC's office and they can run tracks for them back in time (supportive). In their opinion this is proprietary information in event of FOI. Better if Ministry only has access to real-time data. Would prefer the MC own the data and allow them to make decisions on length of time to store data (thinking approx. a week vs. 3 months). Emphasised cost of long-term storage, especially as video takes up quite a bit of space. Cost to change what's currently provided for reporting in electronic format.	nil
20	**Systems-Work Reporting / Inventory**	Create a mimimum specification or contract language to describe file format for routine and quantified maintenance services, inventory updates and quantified work plan for summer. Develop a data warehouse for storing all contractor work accomplishments. Require contractors to provide a format for routine work accomplishments, quantified work accomplishments and limited inventory updates.	The Board approved this resolution except for: Work with theInformation Management Branch to determine the ability to create and related costs associated with development of a data warehouse.	RoadBuilders committed to send out suggestion to their tech folks to assess if their systems are capable of producing the suggested information. Ministry was asked to provide list of software collected by WB used by the various M/C's-(since done)	nil
13	**Quality-Intervention**	Intervention process to included opportunity for contractor to earn back CAP bonus if lost due to Notice to Comply. Contractors to establish, implement and maintain an EMP (environmental plan) as part of their QMS. Template to be provided to contractor's as baseline. Base the CAP rating as follows: local assessment (55%); reduce office audits to 5 per season increase field audits to 25-30 plus one detailed audit per season; regional audits (35%); stakeholder feedback (10%).	The resolution is approved subject to the revisions outlined below: Item 1(a) is approved. Item 1(b) should be amended to include the salt management plan. The Project Board does not approve the revision to the percentages in the contractor assessment program outlined in item 1(c). Clarify item 1(d) and include information regarding the quality management system.	Not supportive of QMS being contractually obligated. Believe this is an administrative issue, not contract issue because Ministry has to approve changes to the QMS and we issue a QMS payment that could've been withheld. RB suggest we could also use NCR's, not meeting spec without completing some of those commitments. They believe we have lots of teeth in the current agreement to make sure QMS commitments (value added) are delivered. Not administered consistently throughout the province; some held to their commitments. State "Contractor delivering full intent of their QMS" as reason to withhold QMS payment. Not supportive of Environmental Management Plan being contractually obligated. New work that wasn't expected 15 years ago. Supportive of Ministry looking at permitting approach with MOE and FLNRO streamline. Had troubles where MC has developed good relationship with MOE/FLNRO and then MOTI interferes in that relationship, causing delays in permitting process. EMP's will be very different in each service area, how will it be scored consistently?	nil
6	**Quantified Plan**	Use the SA 11 Schedule 5 language including the mix of unit price bid and lump sum activities. Final quantified plan to be submitted to project board upon completion for all activities to included as lump sum.	Board was in agreement with this resolution; asked that review be made of final list of activities to be included as lump sum items. The Project Board asked for clarification of background information in the resolution and inclusion of the provisional sum percentage of the total Quantified plan value.	OK with lump sum in general, but would not want it to be greater than 10% of total Quantified valuel. Review the no mark-up in lump sum in 2.3 in Schedule 5 of SA11. RB's feel mark-up similar to previous contract should stay. Provide a copy of proposed accomplishment report to so MC's can determine if their systems can report out in that format and provide that information. Vast majority of the accomplishment information provided was never used since 1988, what do we really need and how frequently (how detailed).	nil

7	**Procurement Model**	Pre-qualification requirement with pass/fail assessment - company info, experience and qualifications,3rd party documents, generic high level QMS components. QMS overview (5 pts); winter maint (20 points); innovation and value added (5 pts.). Price proposal evaluated on a 70 point basis.	Board was in agreement with this resolution with caveat pre-qual QMS would be high level.	Find it harsh to be disqualified from the first 8 if they fail the QMS portion. Due to bonding, not able to bid all 8 at once. Need to stagger. In 03/04 feedback was received between first 8 SA's proposals submission deadlines so MC's were able to make changes before closing of the next SA. Disqualifying good proponents that will be out for the first 8 – maybe smaller chunks (4's?). Asked for ministry to send the dates/timelines of the RFP's from 03/04 (done)	nil
19	**Annual Price Adjustment**	Adopt the BC CPI as the price adjustment index, indexing 93% of the contracts. Insurance premium adjustment value: remove the insurance premium adjustment value fro the current price adjustment calculation. Status quo using current PIF in place: labour (47%), fuel (8%), residual (38%) = 93%.	Provide the following information: o Indexes used by other industries such as health and education. o BC's price index adjustment compared to CPI since privatization. o What our model would look like if the current residual index was replaced with CPI. o Comparison of CPI and the cost of insurance.	None presented, therefore no feedback provided.	
16	**Renewal Strategy / Length of term**	Length of term to be 8 years, with a disrectionary contract extension of up to 3 years. Timing of future maintenance contracts to be staggered in bundles by district to all for a "pipline" of bidding.	Further information is to be provided about the following: o Qualitative impacts of the length of term in the current agreements; o Timing of contract end dates; o Pros and cons of extension	RoadBuilders have indicated their preference for 10 year contract with 5 year extension option.	nil
14	**Pavement Marking / Elect. Maint.**	Pavement marking not to be tendered with highway maintenance agreements. Electrical maintenance services will not be tendered with highway maintenance agreements.	Board was in agreement with this resolution	General discussion with no follow up required.	nil
24	**Service Area Boundaries / Award Limit**	SA boundaries: modify some SA boundaries: Highway 1 and 1a near Cowichan from SA 1 to SA 2. Sea to Sky: SA 6 absorb remainder of SA 4 entirely; SA 6 absorb south section of SA 4 (upper levels area); SA 16 absorb north section of SA 4 (Pemberton area); Award Whistler area to Sea to Sky concessionaire. Idabel Lake area near Big White ski hill from SA 9 to SA 8. Galena/Shelter Bay ferry operations and Trout Lake from SA 12 to SA 10. Highway 93 from SA 12 to SA 11. Highway 16 west of junction of Highway 16 and 37 at Kitwanga from SA 25 to SA 26. Highway 16 west of Ksiks from SA 26 to SA 27. Award limits: set the maximum number of SA's to be held by one company to FIVE.	Scheduled for Board meeting Jan. 24th, 2017	Determine if SA11 counts as one of the 5 in the award limit going forward? Hard to gain consensus from RB's members about the number of SA's one maintenance contractor (MC) can hold. 4/5 seems to be about right. No comments with tweaks to SA boundaries, happy to stay with 28 service areas.	nil

Maintenance Contract Renewal Board of Directors
Meeting #28 – January 16, 2017

MINUTES

Project Board Members
Kevin Richter – Chair
Nancy Bain (Regrets)
Norm Parkes
Ashok Bhatti (Regrets)
Mike Lorimer
Scott Maxwell
Rodney Chapman

Project Board Delegates (if applicable)
Ellen Slanina

Project Team Members
Ian Pilkington – Project Director
Christina Klatt – Secretariat
Dan Palesch – Deputy Project Director

Working Group Leads
Jurgen Lutter

28.1 Call to order and approval of agenda

- The meeting was called to order at 1:36pm.
- The agenda was approved.

28.2 Approval of Meetings #27 Minutes.

- **ACTION ITEM 28.2.1 – Christina:** Clarify action items.
- Minutes of Project Board meeting #27 not approved.

PROJECT STATUS UPDATES

28.3 Resolution #22 – Gravel Pits, Yards, Salt Sheds

- **ACTION ITEM 28.3.1 – Jurgen:** Provide information about the impact increasing the gravel fee will have on the development of the pits.
- The Project Board approved completion of condition assessments of Ministry-owned salt sheds.
- **ACTION ITEM 28.3.2 – Jurgen:** Determine how many salt sheds could be removed and the associated costs.

28.4 Resolution #23 – Wildlife Exclusion Systems Local Area Specification

- The Project Board approved obtaining an accurate inventory of the existing Wildlife Exclusion Systems and that the Contractor must complete inspection and maintenance of these systems in the next round of agreements.

28.5 Cumulative Costs of Draft Resolutions Report

- **ACTION ITEM 28.5.1 – Ian:** Prior to approval, additional information is required about the following resolutions:
  - #6 – Quantified Plan: value of Lump Sum
  - #7 – Procurement Model: contractually obligate innovation
  - #11 - Bridges and Structures Maintenance: BCIT certification costs
  - #12 – AVL Technology: data to be collected by the Ministry
  - #17 – Surface Maintenance: cost of sweeping bike paths/shoulders
  - #22 – Gravel Pits and Salt Sheds: refer to action items 28.3.1 and 28.3.2.

NEW BUSINESS

28.6 Future Meetings/Housekeeping

- The next meeting will be held on January 19, 2017 to discuss the summary of resolutions with cost implications.

28.7 Adjournment

The meeting was adjourned at 5:05 pm.

Highway Maintenance Contract Renewal Project

PROJECT BOARD SUMMARY RESOLUTIONS WITH COST IMPACTS

Resolution #	ITEM	WORKING GROUP RECOMMENDATION / RESOLUTION	PROJECT BOARD FEEDBACK	ANNUAL COST ($M)	STATUS (Approved / Pending)
23	**Local Area Specifications**	Wildlife exclusion fences: develop inspection and maintenance requirements. ($500K) SA 21: South Taylor Hill winter maintenance/enhanced dust control.($850K) SA 22: Enhanced dust control. ($245K) SA 23: Additional work for Germansen Landing Road. ($300K) SA 14: Additional winter maintenance Coquihalla/rest area ($415K)	The Board approved this resolution.	2.3	Approved
18	**Traffic Management**	Amend traffic management specification to reflect the requirements of the new standard of traffic management as set out in the 2015 edition of the TMM.	The Board approved this resolution.	1.6	Approved
21	**Winter Maintenance**	For temperatures greater than -9 degrees C, require anti-icing and return time to bare pavement on Class A, B and C in 24, 36 and 48 hrs, respectively (as in SA 11 specification).	Provide cost/benefit analysis of anti-icing and de-icing at -9 degrees C or greater. Determine if a sufficient supply of winter chemicals is available for the increase use expected across the Province. Provide further analysis on the determination of time to bare class A, B and C roads.	3.0	Pending
		ALTERNATIVELY: For temperatures greater than -9 degrees C, require anti-icing and return time to bare pavement on Class A, B and C in 12, 16 and 36 hrs, respectively.		3.0	
		Have same service level on all lanes of Class A highway.	Determine where savings are achieved to offset the cost of multi-lane plowing on all Class A highways.	9.5	Pending
9	**Roadside**	Litter: increase litter collection on lower class highways and decrease on higher class highways (as per table response times). ($600K)	The Board provisionally approved this resolution	0.6	Pending
		Rest Area: adjust opening and closing dates from Easter to Thanksgiving Identify the need for preventative work, where required. ($1.2M) Use SA 11 language so all rest areas receive the same level of service as Class A.	The Board provisionally approved this resolution	1.2	Pending
11	**Bridges and Structures**	Contractor bridge inspectors required to have equivalant training as Ministry, such as the bridge inspection course offered by BCIT. Contractor will have 2 years to complete. ($66K for 2 trainees for duration of contract.)	Resolution was provisionally approved subject to the following: Provide further information on the form of Bridge training or certification that would be required and further rationale on if its necessity; Provide a cost breakdown for washing of retaining walls. At a subsequent meeting, the Board approved BCIT or equivalent training and further requested use of existing Ministry bridge assessment form for inspections. The Board also requested further information on necessity to wash retaining walls and ungulate guards each year.	0.066	Pending
		Contractor must routinely inspect retaining wall and ungulate guard structures. ($97K)		0.097	Pending
		New and existing retaining walls and ungulate guards must be cleaned and washed. ($87K)		0.087	Pending
22	**Gravel Pits / Salt Sheds**	Gravel: increase gravel pit fee from $1.75m^3 to $2.35m^3 for both processed and unprocessed materials taken directly from pit face and incorporated into works fee for duration of contract rather than allow for annual increases.	The Board requested further analysis of cost impacts of increase in gravel pit fee and removal of salt sheds from Ministry yards.	0.3	Pending
		Salt Sheds: no new salt sheds allowed in Ministry pits now or in the next round. Existing salt sheds to be eliminated or removed from ministry working pits where possible.		15.0	Pending
17	**Surface Maintenance**	Pavement patching: create isolated permanent patch activity as a lump sum item in schedule 5 and add a new definition for isolation. Dust control: all dust control applied offset of 1 metrer from shoulder of road (same as base stabilization): a) for roads between 40-100 industrial vehicles/day dust control for all classes to read hills over 5%, curves, intersections bridge approaches; and b) road over 100 industrial or commercial vehicles/day, complete entire travelled lane. Base stabilization: define the terms for base stab end product and application rate; and adust the warranty period to 120 days or freeze up. Bicycle path and pedestrian walkway: create new specification. Railway crossing maintenance: provide a cap of $35,000. Cycling/Tourism: Additional shoulder sweeping for cyclists ($800K)	Patching & Crack Sealing - provide clarification of the lump sum model and further analysis on the distance to both permanent and temporary asphalt plants. Dust Control - provide additional cost analysis. Base Stabilization – further analysis of the application rate is required. Bicycle Path & Pedestrian Walkways - further detail is required regarding activities included in the new specification and the associated costs, if any. Railway Crossing Maintenance - further cost analysis of the routine maintenance services cap required. Add requirement for additional shoulder sweeping to promote cycling tourism, etc.	0.8	Pending

Highway Maintenance Contract Renewal Project

PROJECT BOARD APPROVAL SUMMARY

TOPIC	WORKING GROUP RECOMMENDATION / RESOLUTION APPROVED BY THE PROJECT BOARD
Winter Maintenance	- Clarify definition of Maximum Allowable Accumulation - Clarify language requiring contractors to remove snow from paved shoulders in a timely fashion. - Adopt the Service Area 11 requirements for management of compact snow in temperatures below -9 degrees centigrade. - Address widespread freezing rain and extreme event response through specifications and within the contractors Quality Management System. - Incorporate maintenance requirements for clearing snow from ungulate guards and use of snow fencing. - Adopt the Service Area 11 requirement to return Class A, B and C paved roads to bare pavement within 24, 36 and 48 hours, respectively. - Include language requiring use of anti-icing in advance of forecast storms, when conditions permit.
Bridges and Structures	- Incorporate requirement for contractor bridge inspectors to have Ministry-equivalent training, such as through the bridge inspection course offered by BCIT. -Enhance washing by incorporating new and existing retaining walls in salt splash zones and ungulate guards.
Traffic Management and Sign Maintenance	- Amend the traffic management specification to reflect the requirements of the new standard of traffic management, as set out in the 2015 edition of the Traffic Management Manual.
Surface Maintenance	- Create a definition for isolation and create an isolated permanenet patch activity as a lump sum item in the Quantified Plan. - Modify the Dust Control specification to require dust control application offest of 1 metre from the shoulder of a road (same as base stabilization): for roads between 40 and 100 industrial vehicles per day, for all classes, hills over 5%, curves, intersections and bridge approaches; for roads over 100 industrial vehicles per day, the entire travelled lane. - Define the terms for base stablization and application rate to be end product and adjust the warranty period to be 120 days or freeze up. - Incorporate a routine maintenance services cap of $35,000 in the Railway Crossing Maintenance specification. - Create a new sweeping specification for bike paths and pedestrian walkways, including additional shoulder sweeping for cyclists.
Drainage Maintenance	- Provide more clarity to language in the Drainage Appliance Maintenance specification to differentiate between Routine Maintenance Services and Quantified Maintenance Services by defining hand work is Routine and machine work is Quantified. - Improve consistency in performance time frames by road classification throughout drainage specifications. Mirror performance time frames in the Service Area 11 Ditch Maintenance specification.

TOPIC	WORKING GROUP RECOMMENDATION / RESOLUTION APPROVED BY THE PROJECT BOARD
Roadside Maintenance	- Improve level of service to the Mowing and Vegetation Control specification by including Class 6 and 7 Highways and enhancing language clarity related to raised infrastructure. - Enhance language clarity in the Brush, Tree and Danger Tree removal specification related to expectations for brushing widths, Danger Tree assessment and removal, hand brushing/tree removal and disposal of brush/cuttings. - Enhance level of service in the Litter Collection and Graffiti Removal specification by shortening response times. - Enhance level of service in the Rest Area Maintenance specification by increasing opening times from Easter to Thanksgiving, providing an opportunity to extend the opening/closing periods, incorporating proactive maintenance instead of just reactive repair, clarifying required maintenance activties and improving structural and heating/water/sewer response times to immediate response. - Clarify language in the Fence Maintenance specification to ensure clear understanding of fencing responsibilities.
Major Event and Incident Response	- Include a $10,000 routine maintenance services cap for Major Events
Communications	- Contractors should be required to monitor social media platforms, use an automated acknowledgement of receipt, be proactive in their use of social media by having a presence and monitoring a minimum of two social media platforms.
Highway Patrols	- Increase clarity in specification by relocating "forecasted events language to the Winter Maintenance specifications. - Revise summer classification to include periods of heavy rain using the Environment Canada definition. - Add the requirement to document unsafe conditrions found during monitoring not remediated immediately.
Highway Inspection	- Incorporate requirement to inspect all highway components in the first year and within every three years thereafter and to inspect all drainage systems and safety devices annually.
Systems for Work Reporting and Inventory Tracking	- Create a minimum specification for contract language to describe reporting format for routine and quantified maintenance services, inventory updates and summer quantified work plan. - Develop a data warehouse for storing all contractor work accomplishments.
GPS and AVL Technology	- Adopt AVL technology by outlining reporting requirements without mandating technology or being perscriptive - MC to provide a web interface to allow only Ministry staff to view the live movements of plow trucks, graders and patrol vehicles (no Ministry ownership) - Ensure material usage data capture reporting is rolled up as opposed to detailed info - Develop policy on how live location data is to be consumed
Pavement Marking and Electrical Maintenance Amalgamation	- Pavement marking and electrical maintenance services should not be tendered with this round of highway maintenance contracts
Incorporation of Rehabilitation Activities into the Maintenance Agreement	- The rehabilitation program should not be incorporated into this round of highway Maintenance contracts.
Quantified Plan	- Use the Service Area 11 Schedule 5 language to include the mix of unit price bid and lump sim activities.

TOPIC	WORKING GROUP RECOMMENDATION / RESOLUTION APPROVED BY THE PROJECT BOARD
Quality and Intervention Processes	- Intervention process to include an opportunity for contractors to earn back a lost Contractor Assessment Program payment lost due to a Notice to Comply. - Incorporate requirement for contractors to establish, implement and maintain and Environmental Management Plan (EMP) and Salt Management Plan as part of the Quality Management System (QMS) using a template provided by the Ministry as a baseline. - Local assessments requirements include reduction in field audits to 5 per season and increse to field audits to 25-30 plus one detailed audit.
Procurement Model and Evaluation Process	- Include a pre-qualification (RFQ) requirement with pass/fail assessment. Proponents evaluated on company info, experience and qualifications, financial documentations, and generic high level QMS components. - RFP Evaluation weighting: 30% Services, 70% Price (same as SA11). - Provide the option to use a Bid Bond instead of Irrevocable Letter of Credit (ILOC).
Service Area Boundaries and Award Limit	- Include a limit of five Service Areas for any one company. - Modify the Service Area boundary from SA 26 to SA27 at Highway 16 west of Ksiks - Modify the Service Area boundary from SA11 to SA12 at Highway 93 - Modify the Service Area boundary from SA12 to SA10 at Galena/Shelter Bay ferry operations and Trout Lake - Modify the Service Area boundary from SA01 to SA02 at Highway 1 and 1a near Cowichan for 8km.
Annual Price Adjustment	- Retain the existing cost escalation formula for the next round of contracts. Specifically, 47% of the contract value will be adjusted by the Statistics Canada Survey of Employment, Payrolls and Hours (i.e. the Labour component), 8% of the contract value will be adjusted by the industrial product index for diesel in BC (i.e. the Fuel component) and 38% of the contract value will be adjusted by the non-residential building construction price index for Vancouver (i.e. the Residual component, which reflects materials and other costs). The remainder will not be indexed to reflect fixed costs not varying through the life of the contract. - Retain the existing insurance adjustment formula, through which the Province pays 80% of the insurance cost increases for insurance that does not exceed the contracts' requirements or, conversely, reduces payments to contractors by 80% of the savings realized if insurance premiums decrease.
Renewal Strategy and Length of Term	- Adopt an explicit contract extension clause. - Retain the current 10-year contract term with a possible 5-year extension at the Ministry's discretion. - Retain current contract expiry dates.
Local Area Specifications	- Develop inspection and maintenance requirements for wildlife exclusion fences - Maintain local area specifications for enhanced dust control and winter maintenance at South Taylor Hill, enhanced dust control in Service Area 22, enhanced winter maintenance and rest area maintenance on the Coquihalla, and additional work at Germansen Landing Road. - Incorporate a local area specification for invasive plants.
Gravel Pits, Yards and Salt Sheds	- Keep gravel pit royalty fee at $1.75 per cubic metre as per the existing contract for both processed and unprocessed materials. The fee will last for the duration of the contract without annual increases. - No new salt sheds in Ministry gravel pits, remove some existing salt sheds in areas close to maintenance yards or areas with alternate land options to a maximum of $700K. Remaining sheds salt sheds to be maintained by the contractor.

TOPIC	WORKING GROUP RECOMMENDATION / RESOLUTION APPROVED BY THE PROJECT BOARD
Invasive Plant Management	- Create an Invasive Plant Management specification for the propoer handling and disposal of invasive plants by the Maintenance Contractor.

Resolved this _____ day of _____, 2016

Kevin Richter, Project Chair	Date
Nancy Bain	Date
Norm Parkes	Date
Ashok Bhatti	Date
Mike Lorimer	Date
Scott Maxwell	Date
Rodney Chapman	Date
Ellen Slanina	Date

Maintenance Contract Renewal Board of Directors
Meeting #46 – October 20, 2017

MINUTES

Project Board Members
Kevin Richter – Chair
Nancy Bain (Regrets)
Norm Parkes (Regrets)
Ashok Bhatti (Regrets)
Mike Lorimer
Scott Maxwell (Regrets)
Rodney Chapman
Ellen Slanina

Project Board Delegates (if applicable)
Bryan Crosby

Project Team Members
Ian Pilkington – Project Director
Dan Palesch – Deputy Director
Christina Klatt – Secretariat

Working Group Leads
None

46.1 Call to order and approval of agenda

- The meeting was called to order at 9:10 am.
- The agenda was approved.

46.2 Approval of Meeting #45 Minutes

- Approved.

46.3 Action Items Status Update

- Approved.

PROJECT STATUS UPDATES

46.4 Procurement Update

- **ACTION ITEM 46.4.1 – Ian:** Provide a timeline of the procurement process for the upcoming RFQ's and RFP's.

46.5 Specifications Update

- No comments.

46.6 Working Group Resolution Approval

- **ACTION ITEM 46.6.1 – Ian:** After a few minor revisions are made the Resolution Summary will be sent to the Project Board by email for final approval.

NEW BUSINESS

46.7 Future Meetings/Housekeeping

- The next meeting will be held on November 7, 2017 to discuss the action items.

46.8 Adjournment

The meeting was adjourned at 10:47 am.

Ministry of Transportation and Infrastructure

WORKING GROUP FINAL REPORT

DATE: October 4th, 2017

WORKING GROUP: Surface Maintenance Review Process

- Karen Andrews: Team Lead
- Grant Lachmuth (consultant)
- Danny Morris
- Scott Lain
- Tim Meszaros
- Nathan Voogd
- Don Legault
- Caitlin Dobson
- Leanna Illnicki
- Larry Rowe (consultant)

FINAL CONCLUSION:

- Provide clarity to the surface maintenance specs and ensure the maintenance activities identified are appropriate for the intent of the specification
- Incorporate work methods that have evolved over the years of maintenance work
- Incorporate time lines that reflect the work process

BACKGROUND:

- Followed a process. Continued philosophy of Previous Maintenance Agreements as well as leading into the new SA11 Agreement
- The current round (03/04) of Highway Maintenance Agreements used a model based on the ISO 9000:2000 system. Some of the Highway Maintenance Specs did not truly reflect the QA/QC intent, creating gray areas in the agreement and opening up a variety of interpretations.
- Work to a goal of bringing forward a mindset of surface preservation, both in the Ministry as well as the Contractors

ISSUES OVERVIEW*:*

The Working Group believes that the 03/04 Standards are good in principle, but could benefit from modifications. The recommended changes align with the current best practice processes.

<u>ISSUE #1:</u> Additions to Glossary of Terms for Maintenance Specifications and Local Area Specifications

Additions and clarification of Terms from the 03/04 Contract.

RECOMMENDED SOLUTION:

Base Stabilization	A process of stabilizing the crushed granular base aggregate layer using additives (organic or inorganic) applied during or following construction. The process provides a stronger, reinforced base for gravel surfaced roads and a tighter surface that resists moisture penetration, dust formation, and loosening under traffic on gravel roads.
Crack Filling	*a maintenance activity carried out on pavement cracks greater than 25mm width to prevent water infiltration and improve ride, generally by use of an asphalt mix or spray patching.*
Crack Sealing	a maintenance activity carried out on pavement cracks less than 25mm width to prevent water infiltration using Ministry-approved sealants and practices.
Micro Seal	A thin maintenance treatment. A mixture of: polymer modified emulsion, graded aggregates, mineral filler, water and Additives. Instead of breaking and curing via evaporation, like slurry, a chemical reaction causes the material to set-up. (Not included in final Glossary of Terms)
Permanent patch	A pavement patch or repair that is not of a temporary nature, with a service life that should match the adjacent pavement.
Replacement Patch	A Permanent patch that matches the profile and cross fall of the adjacent pavement; it generally consists of mill/fill strategies, but may include other surfacing strategies that yield the same result.
Safety Device	devices that improve the safety of the travelling public and include but are not limited to anti-glare screens, impact attenuators, arrestor beds, cable barriers, dragnet components, runaway lanes and median and roadside delineation devices.

Sand Seal	A sand seal is a spray application of asphalt emulsion followed with a light covering of fine aggregate, such as a clean sand or screenings. (Not included in final Glossary of Terms)
Spray Patching	A mechanical application of approved aggregate/emulsion mixture to temporarily seal pavement segregation areas and small surface openings and potholes up to 300mm size (including cracks of greater than 25mm width) on paved roads, as well as permanently seal small failures/repairs on sealcoat-surfaced roads.
Surface Treatment	A blanket aggregate/emulsion combination that is applied to a road surfaced (using Ministry-approved products and practices) that provides a wearing surface that extends service life. Surface treatment options may include but are not limited to, Graded Aggregate Seal (sealcoat), sand seals, and micro surfacing.
Traffic Islands	such as but not limited to, including median islands, round about islands, quadrants and painted at grade islands.

Pros:	**Cons:**
• Provide clearer definitions in Maintenance Specs.	

<u>ISSUE #2:</u> Surface Maintenance Crack Sealing, Crack Filling & Spray Patching 1-100

Unit price is in currently measured in lineal metres for Crack Sealing and Crack filling. Contractors convert litres of oil used into linear meters. Measuring in linear meters in the field is very difficult for Ministry staff to verify.

Current Spray Patching quantities measured in meter 2 do not reflect how the contractor tracks work (litres of oil used) and it is difficult for ministry staff to measure in the field.

Definitions do not reflect how the work is completed. There are no clear definitions that accurately reflect recommended treatments to achieve end product spec. Definitions outlined in Issue 1.

Recommended Solution:

Crack sealing, Crack filling and Spray Patching is all measured in litres

Pros:

- Provide clearer definitions in Maintenance Specs.

Cons:

- Challenge for Auditor's to confirm Quantities reported in the field.

<u>ISSUE #3:</u> Surface Maintenance – Highway Patching

Currently, Contractors have to convert asphalt tonnage back to square metres as per the Schedule 5 unit price. The conversion means that quantified reporting is not necessarily representative of the work completed in the field and as such the Ministry cannot provide an accurate area of patching when yearly totals were requested by HQ for their executive summaries.

Currently, no definition for Isolated Patching in the 03/04 Agreement (it is identified as a unit price item in Schedule 5.)

RECOMMENDED SOLUTION:

Patching activities to be reported in Tonnes

Define "Isolated Patching"

Pros:

- When paving is being completed in isolated areas the costs for paving can substantially increase which may not be addressed in a bid unit price / or is included in a bid unit price with a substantial amount of risk. Reduced risk by defining isolated areas.

Cons:

- Potential for resistance to change.
- Potential increase in cost of work

<u>ISSUE #4:</u> Highway Surface Treatment 1-110

There is currently no definition for Highway Surface Treatment and there is only one unit price identified in schedule 5 even though a variety of surface activities could be completed under Highway Surface Treatment.

RECOMMENDED SOLUTION:

Define "Highway Surface Treatment" as "A blanket aggregate/ emulsion combination that is applied to a hard-surfaced road (using Ministry approved products and practices) that provides a wearing surface that extends service life. Acceptable surface treatment options include Graded Aggregate Seal (sealcoat), sand seal, and micro surfacing. (As recommended by Tim Meszaros, Senior Geotechnical Engineer)

List three activities in Schedule 5 - Seal Coat, Sand Seal and Micro Surfacing, all in M2 unit prices.

Pros:

- Gives Ministry Staff more options for surface treatment
- Allows for the right treatment option for a given road
- Proactive treatment options will produce cost savings
- Allows contractors to bid unit prices that are appropriate for the surface treatment type

Cons:

- More expensive than a program of one type of treatment. Smaller and varied programs cost more to organize and set up

ISSUE #5: Dust Control and Base Stabe 1-140

Currently, there are different minimum widths based on class of road ranging from 4.5 (Class 3 and 4) to 3 meters in width (Class 6). The minimum width of Dust Control on the majority of gravel roads does not span the driving road surface and Dust issues and stakeholder concerns are not fully mitigated.

Application rates are not defined and the Ministry has no recourse to ensure the application (rate) is applied appropriately for the surface treatment. For example, base stabilization and dust control could be applied at the same application rate, when the intent is that the application rate of base stabilization is higher than dust control.

RECOMMENDED SOLUTION:

Dust Control widths to be one meter from either side of the road shoulder for all classes of road

Add application rates for dust control and base stabilization to the specifications.

Pros:

- Less complaints from the public
- A safer road surface
- The expectation on application rates is clearly defined for the Contractor and Ministry staff can audit for compliance to the specification.

Cons:

- An increase of cost, depending on the width of the roads and inventory surface change from the 03-04 Contract

ISSUE #6: Dust Control and Base Stabe 1-140

Under the 03-04 Agreement the Contractor must re – apply dust palliative product as routine. This was was removed in SA 11.
Dust Control complaints are common and frequent in many areas. The current timelines to respond to complaints are very tight (2 days) and often difficult for the contractor to meet. In some cases surface preparation needs to be completed in advance of re-application.

There is no required completion date. Contractors can be completing dust control applications in August and September which is beyond the season when dust control issues are of primary concern.

RECOMMENDED SOLUTION:

Routine portion of the specification to stay the same as 03-04 Contract

Performance Time Frames changed from 2 days from detection to 5 days from detection, as this is a more realistic time frame for the contractor to respond

Initial Dust Control applications are to be completed by June 30th, unless otherwise approved by the Ministry. (It is recognized that there are external factors, such as weather, that may affect application time lines, but these exceptions can be negotiated as one off, as and when appropriate, with the Districts.)

Pros:

- Re-applications will not affect the Quantified Plan
- Initial dust application would be more timely and more likely to meet stakeholder expectations
- A more appropriate response time for contractors when dealing with complaints

Cons:

- May get complaints with the extra time added to the response time frame
- Contractor's bid price may reflect the risk with the routine component

ISSUE #7: Dust Control and Base Stabe 1-140

Under the 03-04 Contract Sect. 3.2 Quantified Maintenance Services c) Table (F) Highways with 40 or more commercial and industrial type vehicles per day with 3 or more axel to receive full length, full width dust control. Issue 40 vehicles is quiet low and equals to 4 vehicles per hour, significant risk to the Contractor that they will have to complete dust control over the entire length with industry changes in haul routes.

Recommended Solution:

- Break this Spec into two sections 1) for roads with between 40 – 100 commercial or industrial vehicles per day, dust control for all classes to read hills over 5%, curves, intersections, bridge approaches and along lakes and rivers. 2) would read, for roads with over 100 commercial or industrial vehicles per day complete entire travelled lane (all classes)

- Consideration should be taken into account the duration of the haul

Pros:

- A more realistic and safer dust control approach where commercial hauling is occurring.

Cons:

- May create extra dust sites
- Time and cost associated with determining

- Less risk to the Contractor
- deals with safety issues

vehicle counts, if not provided by the haulers.

ISSUE #8: Dust Control and Base Stabe 1-140

365 day warranty period is not generally enforced. There is currently no definition of the purpose and end product that should be accomplished by Base Stabilization making it difficult to warranty.

Base Stabilization not defined in the 03/04 agreement

Recommended Solution:

Warranty Base Stabilization "for 120 days or until freeze up."

Define Base Stabilization as " A process of stabilizing the crushed granular base aggregate layer using additives (organic or inorganic) applied during or following construction or reshaping of the road surface. The process provides a stronger, reinforced base for gravel surface roads and a tighter surface that resists moisture penetration, dust formation, and loosening under traffic on gravel roads. (Definition suggested by T. Meszaros)

Pros:

- 120 days would get most contractors to the winter period, less risk
- Would be easier for Ministry staff to enforce the warranty as it would be more seasonal
- lasting longer which could take it into the hinge season

Cons:

-

ISSUE #9: Surface Cleaning Maintenance – 1-180

In the 03/04 Agreement all sweeping is a routine activity. District would like options to request sweeping, that may be needed, to address stakeholder concerns that are beyond the routine performance requirements. For example, a request for additional sweeping during a special event.

In the 03-04 Agreement the Maintenance Contractors are responsible cleaning Paved Surfaces a minimum of every 120 days for four lane and Urban Highways as a routine activity. There are a number of Service Areas in the southern part of the Province that rely on this clause as part of their annual sweeping program. This clause was removed in the SA 11 specification.

Completion of annual sweeping is currently measured as one month from the last winter abrasive application. As the need for abrasive application can vary across a service area it is difficult to quantify this response time. Sweeping is often continuing well into summer. There is a need to prioritize higher volume corridors.

In the 03/04 Specification there are different performance timeframes for spring sweeping for travelled lanes and adjacent infrastructure. Sweeping all these components is generally completed at the same time and that practice needs to be clarified in the specification.

Recommended Solution:

Add routine sweeping in Urban Areas at a frequency of three times annually. Amend specification for routine annual sweeping to include Designated Bike Lanes

Class 1 and 2 travelled lanes and adjacent infrastructure is to be swept by May 15 annually (Routine)

All other classes to be swept by June 15th annually (Routine)

Add a quantified option for additional sweeping at a unit price in the quantified plan for sweeping requests that fall outside of routine sweeping activities.

Pros:

- The Ministry will have better control where extra surface cleaning is needed
- Increased sweeping and priority sweeping where there are high stakeholder needs
- Compensation to the Contractor at a set unit price when there are additional requests
- Clear timelines to complete sweeping – with priority areas being swept first

Cons:

- Contractor may have to alter their planned activities

ISSUE #10: Cattle Guard System Maintenance 1-200

In SA 11, Cattle Guard Maintenance, the wording refers to just Cattle Guards and Ungulate systems are not covered in the current specifications.

In the 03/04 agreement there is no definition for Cattle guards.

Unit price is for Cattle guards (surface component), and does not include the components that make up the Cattle Guard System, such as concrete or wood bases.

There is currently no warranty for cattle guard installation or components.

Recommended Solution:

Recommended including Ungulate Guards in this specification - Ungulate & Cattle Guard System Maintenance
The unit price should be Lump Sum (changed in SA 11) so Ministry Staff have flexibility to specify what type / base of system is appropriate for the location.

Add a new definition for Cattle Guard System – means a device, including all its components that is used to restrict the passage of cattle including, but not limited to the rails, tubing, supports, bases, tie in fencing, gates and related hardware; Add warranty clause.

Pros:

- The Ministry will get a better product, with less maintenance and the specification speaks to the whole system.
- Less complaints
- Less risk to Contractor in bid price/ now Lump Sum
- Ministry Staff have flexibility using Lump Sum to ensure appropriate product used
- 1 year warranty

Cons:

ISSUE #11: Curb, Island, Barrier Maintenance and Safety Devices Specifications 1-220

Current definition for Safety Devices states "devices that improve the safety of the travelling public and include but are not limited to antiglare screens, impact attenuators and median and roadside delineation devices.

In the 03/04 specifications the response times for island repair is not prioritized.

Recommended Solution:

- Recommend adding arrestor beds, cable barriers and dragnet components to the definition.
- Add appropriate maintenance response times for the additional safety devices
- Differentiate in the performance criteria, response times for islands with pedestrians, bike or assistive device usage from those raised surfaces that do not have those uses.

Pros:

- Would capture all safety devises
- The Ministry would not have to include as a Local Area Standard.

Cons:

- Not all Service Areas have these items, Contractor may put in a high price, then if the area obtained one of these devises,

- Island repair and maintenance is prioritized to better serve stakeholders

maintenance cost could be unrealistic.

ISSUE #12: Railway Crossing Maintenance 1-230

Currently, the Maintenance Contractors have very little influence on rail crossing maintenance or the costs they incur from Rail Companies. The cost of crossing improvements have dramatically increased in some areas, Contractors have received bills well in excess of the 100,000 dollar range.

Any disputes that arise from questionable invoice costs are often passed onto the Ministry to deal with.

Recommended Solution:

Add a Routine Maintenance Services Cap so contractors when bidding can reasonable anticipate the costs they may occur. ($35,000)

Continue to have the management and coordination of Railway Maintenance handled through the Maintenance Contractor.

Have funding available through our Rail and Navigable Waters group in headquarters to assist Districts where costs exceed the Routine Service Cap.

Add response time for restoring sight lines. Response times for restoring sight lines will be needed to meet Transportation Canada's Grade Crossing Standards

Pros:

- Contractor can reasonable anticipate cost for bidding purposes
- Less Risk
- Contractor manages the processes/ coordination with the Rail Companies

Cons:

- Risk is still built into contract

TECHNICAL ADVISORY COMMITTEE FEEDBACK:

Issue #1: Definitions were supported.

Issue #2: Resolution finalized through TAC as the unit price changes we already completed in the SA 11 agreement.

Issue #3: TAC supported the addition of an "Isolated Patching" Activity to Schedule 5, but the definition was to be determined.

Issue #4: Definition and inclusion of the various treatment types measured in m2 in Schedule 5 supported.

Issue #5: Supported the increased width, which would be managed within the Quantified Plan quantities/Supported the addition of application rates

Issue #6: Recommended by the Quantified Maintenance Services group to remove the routine component of dust control applications. All dust control applications will be paid as per the unit price per litre. Supported initial applications of Dust Control are to be complete by July 1st.

Issue #7: Concern this is a decrease in the level of service.

Issue #8: Discussed the 120 day or to freeze up as warranty.

Issue #9: Support increased routine sweeping – recognize that there is a potential cost increase/Support a line for quantified sweeping as it can be managed with in the quantified plan/Support defined performance timeframes for routine spring sweeping

Issue #10: Supported the recommendations; Ungulate Guards are being covered in the Local Area Agreements Specification; Recommendations Finalized through TAC

Issue #11: Supported by TAC – Resolution Finalized

Issue #12: supported by TAC

Issue #13: Confirm what actual costs are being incurred by Maintenance Contractors

PROJECT BOARD FEEDBACK:

Issue #1: Definitions Supported.

Issue #2: Approved.

Issue #3: Patching to be reported in Tonnes

Issue #4: Approved except for Micro Sealing as quantified item in Schedule 5.

Issue #5: Determine appropriate traffic volumes to trigger justifying increase widths/Board approved to proceed with application rates for base stab and dust control/ Full width applications were added for Class 3 and 4 roads where traffic volumes range from 1000-5000 vehicles per day. On class 4 and 5 minimum widths are 3.5 meters, as traffic volumes are lower. Application Rates for dust control and base stabilization added to the specifications.

Issue #6: Routine reapplications of dust control were removed from the specifications. Initial applications of Dust Control are to be complete by July 1st.(* *Since approved to be complete by June 1st or a later date if approved by the Province).* Wording changed to apply or reapply dust applications within 10 days at areas with deficiencies when required.

Issue #7: Concerns with the reduction in service/No change to this section of the specification

Issue #8: N/A

Issue #9: Support proposed changes; Increased routine annual sweeping; Quantified line item added to Schedule 5 for additional sweeping request; Defined performance time frames for completing spring sweeping

Issue #10: New definition added; Ungulate systems covered under Structure Maintenance Specifications; Unit Price for Cattle guard replacement is lump sum / repair is of cattle guard components is routine; Warranty not added. Products purchased need to meet the Standard Specifications.

Issue #11: Approved.

Issue #12: Approved for $35,000 cap.

Issue #13: Review for pattern of escalation in costs – completed as noted above.; Added response times to address maintaining sight triangles at Rail Crossings; Established Routine Service Cap for each crossing location at 35,000 annually

STAKEHOLDER FEEDBACK:

- Definitions supplied by Tim Meszaros, Senior Geotechnical Engineer
- BCRB were canvassed to provide definitions for isolated patching and provided the following comment:
- The definitions are truly varied, given we do not know where patching will occur any given year, pricing would be a challenge on many of the definitions suggested.
- Ministry Staff: Sweeping in urban areas and designated bike facilities needs to be increased/ Sweeping in Bike Lanes needs to be clearly identified in the Specification

Industry:

- The project team canvassed Road Builders to supply average annual costs for last 10 years for each service area.
- 25 SA's were under 35,000
- 1 SA's was in the 35,000 to 50,000 range
- 2 SA's were in the 100,000 to 130,000 range
- Road Builders was canvassed to contact, a second time, the six service areas which submitted the higher 10 average costs and provide yearly costs for the last five years to determine if there is a pattern in the escalation of the costs. There was no visible pattern, just some crossings and treatments required cost more. two crossings in the SA.

PREPARED BY:
Karen Andrews, Team Lead
Larry Rowe, Consultant

REVIEWED BY:
Project Team Director, Ian Pilkington
Technical Advisory Committee (TAC)

APPENDIX A

TERMS OF REFERENCE

Surface Maintenance

A. PURPOSE AND SCOPE

Review the existing 11 summer surface maintenance specifications in the SA 11 contract to assess changes required to reflect current practice or other improvements. These specifications are as follows: Chapter 1-100; Chapter 1-110; Chapter 1-130; Chapter 1-140; Chapter 1-150; Chapter 1-170; Chapter 1-180; Chapter 1-190; Chapter 1-200; Chapter 1-220; Chapter 1-230

B. BACKGROUND CONTEXT

Some changes were made to the SA11 Maintenance Specifications based on input gathered over the last few years from District staff and Roadbuilders. Most of the changes were made to provide better clarity in the specification language, while keeping the intent and most of the existing language the same. The WG should use the SA11 specifications as a starting point to undertake a thorough review of all existing 2003-04 surface maintenance specifications. The review should include consideration of the list of specification changes/issues provided by MOTI staff/industry. It is important not to actually write the specification in great detail, as this will be done in conjunction with our legal department.

C. PRINCIPLES

When undertaking their review and analysis of the WG topic, Team Leads and WG's should:

1. *Consider the following:*
    a. *impacts to the existing contract budget;*
    b. *impacts to other parts of the Maintenance Agreement; and*
    c. *the Contractor's perspective and how any WG recommendations might impact their ability to successfully meet contractual requirements; and impacts to the public or stakeholders resulting from any proposed changes;*
2. *Provide expert technical review and consideration of existing and potential Maintenance Contract terms and/or Specification documentation;*
3. *Undertake research into maintenance operations and technologies used in other jurisdictions;*
4. *Ensure deliverables are produced in accordance with the Master Project Plan and schedule by utilizing available project management services in support of WG activities;*
5. *Compile WG considerations into periodic (2-weekly) status reports and prepare final recommendation/briefing documentation for review by Renewal Project Team, Technical Advisory Committee, and Project Board; and*

6. *Keep the WG's work and deliverables confidential, and advise the Renewal Project Team of any concerns regarding WG members' actual or perceived conflicts of interest.*

D. TERMS OF REFERENCE SCOPE

1. Review all 11 surface maintenance specifications within the Surface Maintenance category to explore and assess changes or improvements. These specifications are as follows: Chapter 1-100; Chapter 1-110; Chapter 1-130; Chapter 1-140; Chapter 1-150; Chapter 1-170; Chapter 1-180; Chapter 1-190; Chapter 1-200; Chapter 1-220; Chapter 1-230
2. Ensure the specifications reflect the current Standard Specifications for Highway Construction 2012 edition (Section 502, 515, 536 etc.)
3. Review and consider efficiencies such as: combining or amalgamating some specifications into one, or other option(s).
4. Consider if the quantity and type of pavement work is still appropriate based on the current rehabilitation program (i.e. MOTI now has a Provincial Side Road Program of $90M annually that will do considerable overlay and mill/fill repaving projects. Is the quantity of overlay and replacement patching in the Quantified Plans still appropriate? Does it still make sense for the Maintenance Contractor to be doing overlay and replacement patching?)
5. Review comments and suggestions gathered from Ministry staff and industry to see if and how they could be incorporated in the new specifications.

E. TARGET TIMEFRAME AND DELIVERABLES

Milestone/Deliverable	Target Date
Working Group Start up meeting	April 8th, 2016.
Confirm and submit project team, outline and structure	May 2nd, 2016
TAC review #1 due date	June 24th, 2016
TAC review #2 due date	July 8th, 2016
TAC review #3 due date	July 22nd, 2016
Refine and submit for Project Board review	July 25th, 2016
Refine and resubmit for Project Board decision	August 8th, 2016
Incorporate Decision into Agreement	February 2017

F. GOVERNANCE

1. Structure

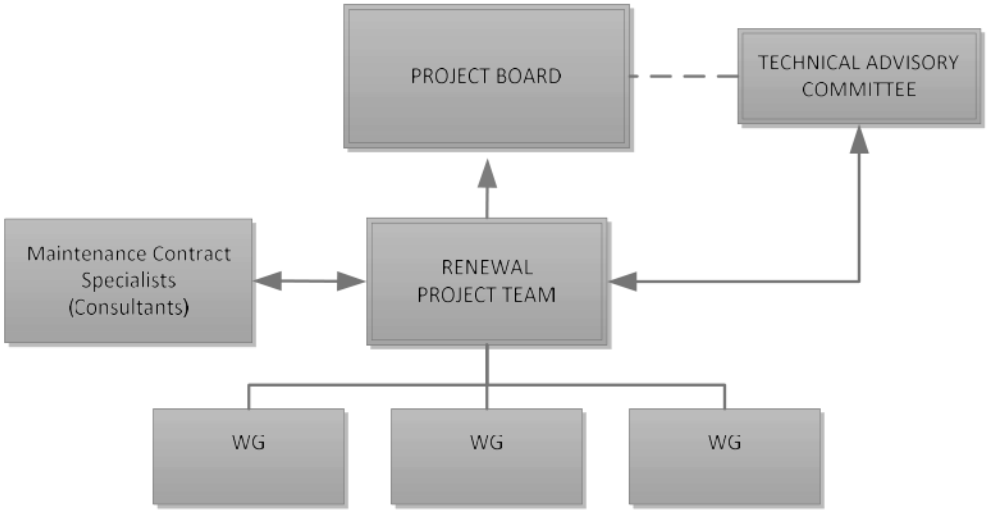

2. Team Members:

- **a.** Team Leads: **Karen Andrews**
- b. Team members: **TBD**

3. Meeting Protocol:

Meetings of the WG can be held in person, by conference call or video conferencing to communicate progress towards tasks and objectives, discuss products and deliverables, and to discuss any new business. An agenda and minutes will be circulated for meetings. Reasonable notice will be provided to WG members in advance of a meeting. Regular status updates may be provided through means other than meetings, such as via email or teleconference.

All efforts will be made to keep costs to a minimum and every reasonable effort will be made to accommodate Team Members' specific needs through the use of technology such as teleconference or video conferencing.

4. Confidentiality

It is anticipated that, WG members will have access to information that is commercially significant and may be subject to Cabinet level confidentiality. WG members will be required to execute a Confidentiality Agreement prior to commencing the assignment.

2018/19

HIGHWAY MAINTENANCE CONTRACT ADMINISTRATION

Training Course for Ministry Staff and Maintenance Contractors

BRITISH COLUMBIA | Ministry of Transportation and Infrastructure

HIGHWAY MAINTENANCE CONTRACT RENEWAL 2018-19

Introductions

- Name
- Your organization & service area
- Role & length of time in role
- Your expectations for today

Using Your Workbook

WELCOME AND INTRODUCTION

Welcome to the 2018/19 Highway Maintenance Agreement Administration course. Over the next two days we will be covering a wide range of information and engaging in a variety of discussions all designed to give you the knowledge and skills to effectively administer the Ministry's new 10-year maintenance agreement within your service area.

If you are not "new" to overseeing highway maintenance agreements, we have designed the course to help you hone your skills and knowledge, as well as share the benefit of your experience with others in the course.

UNDERSTANDING THE WORKBOOK

DID YOU KNOW? Interesting facts related to the 2018/19 Highway Maintenance Agreement.

NEW IN THE AGREEMENT Additions and/or changes to the 2018/19 Highway Maintenance Agreement.

GLOSSARY Some of the definitions of terms used in the new agreement.

APPLY MY KNOWLEDGE Course activities for you to complete individually or in a group.

RESOURCES References and links to additional information on the topic.

WHAT DOES THIS MEAN IN MY WORLD? A place to write your own thoughts and insights on how you might apply a concept or idea to circumstances within your service area.

BRITISH COLUMBIA Ministry of Transportation and Infrastructure HIGHWAY MAINTENANCE CONTRACT RENEWAL 2018-19

2018/19 HIGHWAY MAINTENANCE CONTRACT – Training Course 6

Questions During the Day

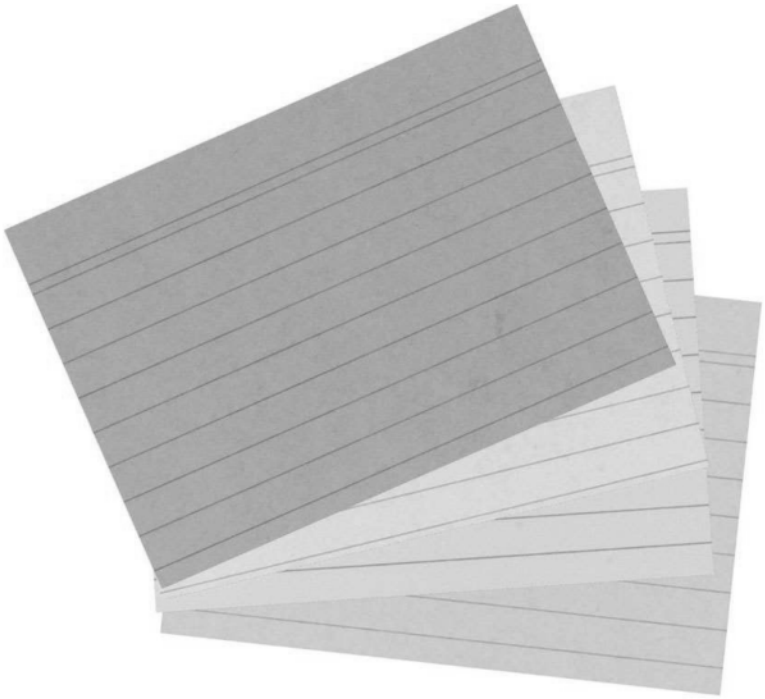

Index Cards

Questions during the day? Write them on the index cards provided. We will collect them and use our breaks to get you answers.

Making this a great learning environment

- Welcome diverse ideas
- Respect everyone's time (return from breaks promptly)
- Tap into the knowledge in the room
- Give facilitator's your full attention
- Check phones/email during breaks if possible
- What else?

Course Agenda

DAY 2 – Ministry Staff and Maintenance Contractors

- Module 1: Apply Key Concepts for Working together
- Module 2: Understand and work within the Specifications
- Module 3: Records and Reporting

Background

- Highways and structures in B.C. have been maintained by private contractors since 1988.
  - Maintain 47,500 kms of highway and 2,800 structures
  - Provide service 24 hours a day, 7 days a week
  - 28 designated service areas
  - $400 million a year

Dog Guardians
In a world where everyone is looking out for number one, who's taking care of number two?
Pick up after your dogs.
Thank You
DISTRICT OF NORTH VANCOUVER
BYLAW #5981-11(i)

Copyright

Get these over to the Highway Maintenance Agreement Course right away ... !

MODULE 1
APPLY KEY CONCEPTS FOR WORKING WELL TOGETHER

BRITISH COLUMBIA | Ministry of Transportation and Infrastructure

HIGHWAY MAINTENANCE CONTRACT RENEWAL 2018-19

After completing this module, participants will be able to:

- Identify the importance of Ministry staff and maintenance contractors collaborating to implement the new highway maintenance 10-year agreement; and,
- Identify the key concepts and actions for collaboration that will support a positive working relationship within your service area.

Why Bring Staff and Contractors Together?

- Emphasize the importance of Ministry staff and maintenance contractors working together
- Help develop tools to support collaboration over the next 10 years
- We have the same objective: Ensure public safety and satisfaction
- We share local knowledge - we live and work in the same community

Collaboration

APPLY MY KNOWLEDGE

Workbook Page 8

Consider what has been your best experiences of collaboration or partnership.

What are the characteristics of a great partnership or effective collaboration?

Concepts for Collaboration

Be Reasonable and Fair

- Get together on a regular basis
- Think win-win
- Use open and honest communication

Concepts for Collaboration

Be Reasonable and Fair

- **Get together on a regular basis**
- Think win-win
- Use open and honest communication

Concepts for Collaboration

Be Reasonable and Fair

- Get together on a regular basis
- **Think win-win**
- Use open and honest communication

Concepts for Collaboration

Be Reasonable and Fair

- Get together on a regular basis
- Think win-win
- **Use open and honest communication**

Balancing Courage and Consideration

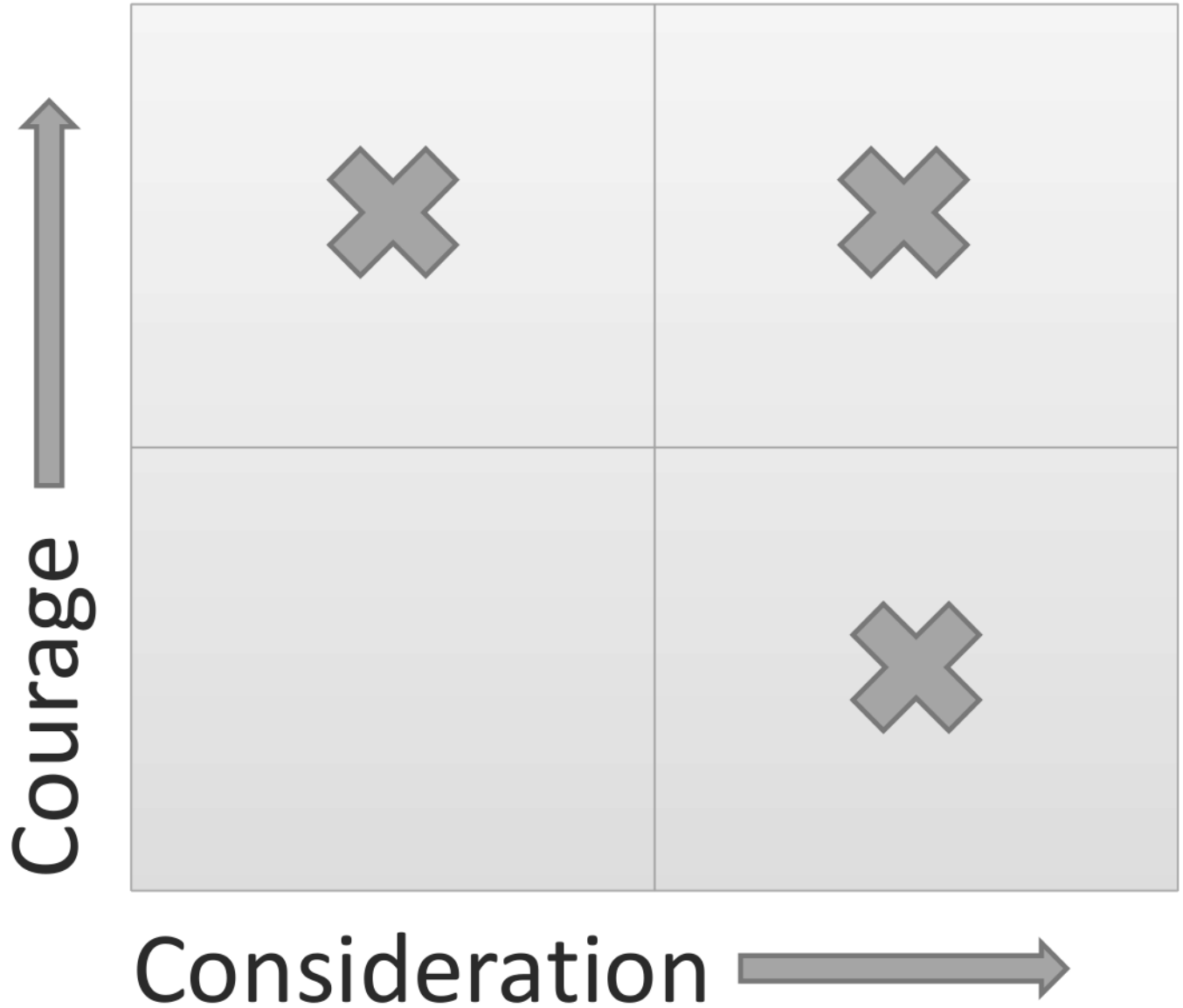

Concepts for Collaboration

Franklin Covey Video

- *"How great leaders have difficult conversations" by Franklin Covey*

https://resources.franklincovey.com/all-videos/how-great-leaders-have-difficult-conversations

Concepts for Collaboration

Focus on Stakeholder Satisfaction

- Deliver good work
- Support proactive stakeholder communication
- Support stakeholder satisfaction while supporting each other
- Provide timely, accurate information

Concepts for Collaboration

Be Good Community Partners

- Build community relationships
- Be involved in community efforts together
- Be good corporate citizens

Concepts for Collaboration

Partner on Urgent Work Priorities

- Work together to ensure safety for all – especially the public
- Good working relationship from the start means partnering in emergencies will come naturally
- Ministry/contractor team supports each other

Concepts for Collaboration

Follow the Quality Management System

- Provides a predictable, consistent approach regardless of the circumstance
- Each maintenance contractor expected to have QMS
- Contractors should follow reasonable, fair and practical approach to delivering services
- Ministry staff also use a reasonable, fair and practical approach to administering the agreement

Concepts for Collaboration

Quantified Plans

- Balance system needs of the agreement area
- Tied to the resources identified in the Service Plan
- Do not include rehabilitation and/or capital works
- Contractors are responsible for developing and managing their work plans
- Staff and contractors need to identify mutually beneficial solutions to achieve positive outcomes

Concepts for Collaboration

Partner in Innovation

- Work together to continually explore if there is a better way
- Be open to each other's new ideas

"There's a way to do it better – find it."
Thomas Edison

WORK
ZONE
BEGINS
END
ROAD WORK

Concepts for Collaboration

APPLY MY KNOWLEDGE Workbook page 12

For this exercise, you will develop a set of actions that will be relevant and specific to your service area for how you plan to collaborate.

In your group:

1. Visit each flip chart station (concept for collaboration)
2. Write one or two ACTIONS you will take to foster the concept in your service area
3. When directed, move to the next concept and repeat
4. Visit all 5 stations

Copyright

We were talking about Highway Rest Areas
and he nodded off ...

MODULE 2
EFFECTIVELY ADMINISTER/IMPLEMENT THE SPECIFICATIONS

BRITISH COLUMBIA | Ministry of Transportation and Infrastructure

HIGHWAY MAINTENANCE CONTRACT RENEWAL 2018-19

After completing this module, participants will be able to:

- Recognize changes in the new agreement format
- Apply the new specifications

Changes in Format

- What do you notice about the format that can help you find information quickly?

Changes in Format

1. Done away with long, wordy specifications
   - Old specs not written in plain language
   - Too wordy, included duplicate language
   - Took more time to get at information

Slide 30

PR32 Include therevised text
Pam Robertson, 2018-09-19

Changes in Format

2. Removed repetitive phrases
   - Some phrases appeared over 75 times
   - Added clause to the Introduction

The following table establishes the maximum time, from the time the deficiency was detected by or reported to the Contractor, within which the Contractor must complete the repair of the following deficiencies:

a) The following table establishes the maximum time, from the time the deficiency was detected by or reported to the Contractor, within which the Contractor must complete the repair of the following deficiencies:

a) start repair of concrete barriers with damage of less than 900 square centimetres of surface area using material of the same type and quality as the existing installation, or by using an epoxy repair product approved in writing by the Province, within 3 days from the time the deficiency was detected by or reported to the Contractor;

g) undertake maintenance of areas chipped or scarred by snowplows, other equipment or vandalism within 90 days from the time the deficiency was detected by or reported to the Contractor;

a) immediately, from the time the deficiency was detected by or reported to the Contractor, notify the Province of build up of sedimentation and damage to drainage appliances; and

d) remove Danger Trees within 7 days from the time the deficiency was detected by or reported to the Contractor;

Changes in Format

3. All information on one topic now in one place
   - Previously, requirements scattered throughout the specs
   - Now it's very clear what the requirements are at all times

a) notify the Province immediately of any incidents of damage and report any indications of potential risk of structural failure; the Province may conduct an assessment;

c) report to the Province any hazardous or observable condition beyond the Right-of-way that is not covered by the Maintenance Agreement or this Maintenance Specification.

a) report Highway condition information in Drive BC in accordance with the Drive BC Web Input Utility User Manual; and ensure condition information remains current;

k) inspect the asphalt surface annually and report any defects (cracks, chipped edges, Pot holes or base failure) to the Province;

h) report to the Province upon detection or notification, any conditions which effect the Highway in performing its designed function but which are not specifically identified in these Maintenance Specifications.

b) communicate any conditions leading to Highway closures, lane closures, Traffic Delays and/or adverse weather that could lead to unsafe Highway conditions, in accordance with the Provincial Incident Response and Travel Advisory Messaging Protocol;

c) immediately report to the Province any hazardous or observable condition beyond the Right-of way that is not covered by the Maintenance Agreement or the Maintenance Specifications.

Changes in Format

4. Specification format is easier to follow, and now includes:
   - Outcome – Province's expectations
   - The Service (Routine or Quantified)
   - Specific requirements (additional requirements)
   - Notes (any supplementary information)
   - Materials and/or procedures
   - Routine maintenance service cap Warranty (if warranty applies)

4.5 Fence Maintenance

4.5.1 Outcome

Restore the functionality of fences.

4.5.2 Quantified Maintenance Services

PM4.5.2-1 Repair or construct fences as follows:

Performance Criteria	Response
a) Initiate temporary repairs to restore functionality to damaged fences that are potentially unsafe along a Schedule 1 or Schedule 2 Highway	immediately
b) Initiate temporary repairs to restore functionality to damaged Speciality Fences that are potentially unsafe	immediately
c) Complete permanent repairs	7 days
d) Construct new Speciality Fences	30 days

Notes:

1) Schedule 1 and Schedule 2 Highways are defined in the *Motor Vehicle Act* Regulations, B.C. Reg. 26/58 ("Schedule 1 and Schedule 2 Highways");
2) Speciality Fences are inclusive to all Highways; and
3) Repairs are only to be competed for fences that have been damaged because of a motor vehicle incident, acts of vandalism, fallen trees from the Right-of-way and Major Events. As stewards of the Highway, the Contractor is expected to work with adjacent third parties to resolve damaged fences that are their responsibility to repair.

4.5.3 Materials and/or Procedures

Refer to Section 1.6 of the Introduction.

Additional materials and/or procedures requirements are as follows:

a) Permanent repairs are to be completed with the same type of fence material.

Changes in Format

5. Gone from using a lot of text to using tables

- Converted text to tables and consolidated language from Sections 3.1 and 3.11 in all specifications.

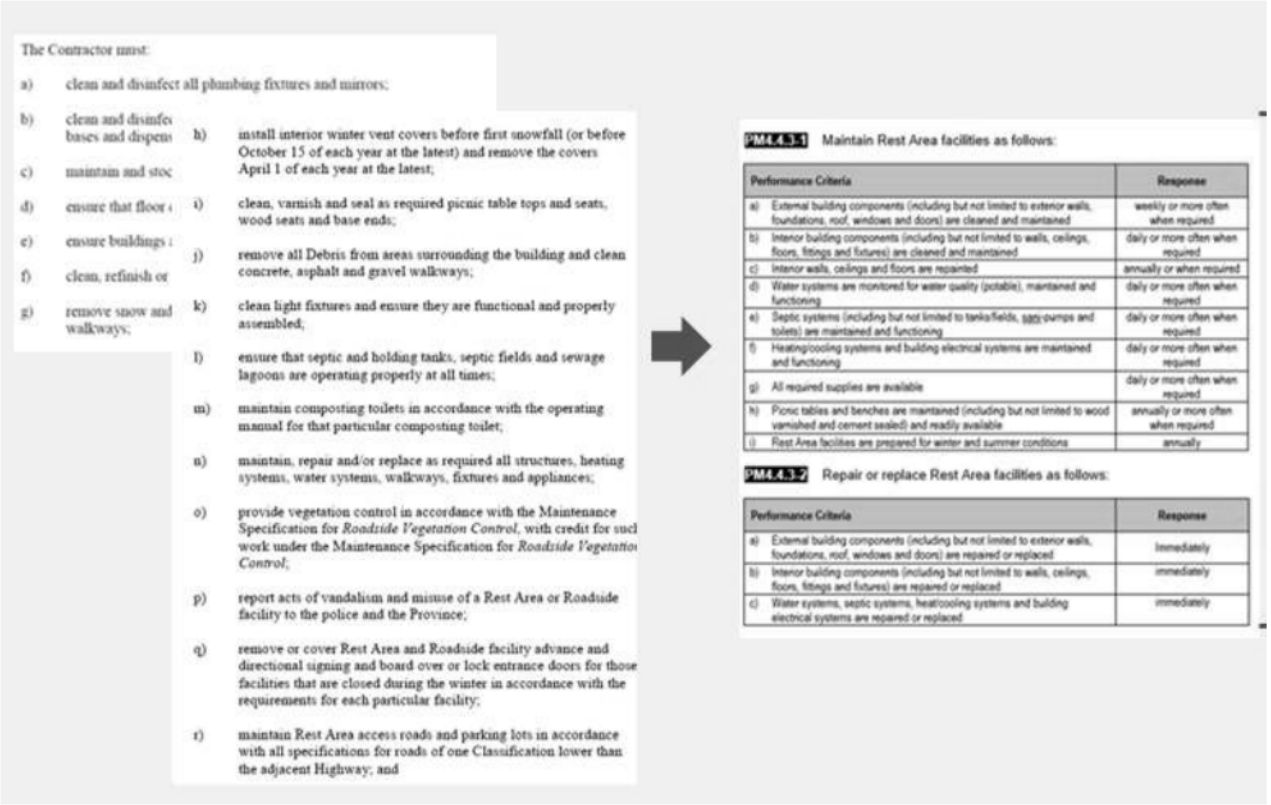

The Contractor must:

a) clean and disinfect all plumbing fixtures and mirrors;

b) clean and disinfe bases and dispen

c) maintain and stoc

d) ensure that floor

e) ensure buildings

f) clean, refinish or

g) remove snow and walkways;

h) install interior winter vent covers before first snowfall (or before October 15 of each year at the latest) and remove the covers April 1 of each year at the latest;

i) clean, varnish and seal as required picnic table tops and seats, wood seats and base ends;

j) remove all Debris from areas surrounding the building and clean concrete, asphalt and gravel walkways;

k) clean light fixtures and ensure they are functional and properly assembled;

l) ensure that septic and holding tanks, septic fields and sewage lagoons are operating properly at all times;

m) maintain composting toilets in accordance with the operating manual for that particular composting toilet;

n) maintain, repair and/or replace as required all structures, heating systems, water systems, walkways, fixtures and appliances;

o) provide vegetation control in accordance with the Maintenance Specification for *Roadside Vegetation Control*, with credit for such work under the Maintenance Specification for *Roadside Vegetation Control*;

p) report acts of vandalism and misuse of a Rest Area or Roadside facility to the police and the Province;

q) remove or cover Rest Area and Roadside facility advance and directional signing and board over or lock entrance doors for those facilities that are closed during the winter in accordance with the requirements for each particular facility;

r) maintain Rest Area access roads and parking lots in accordance with all specifications for roads of one Classification lower than the adjacent Highway; and

PM4.4.3.1 Maintain Rest Area facilities as follows:

Performance Criteria	Response
a) External building components (including but not limited to exterior walls, foundations, roof, windows and doors) are cleaned and maintained	weekly or more often when required
b) Interior building components (including but not limited to walls, ceilings, floors, fittings and fixtures) are cleaned and maintained	daily or more often when required
c) Interior walls, ceilings and floors are repainted	annually or when required
d) Water systems are monitored for water quality (potable), maintained and functioning	daily or more often when required
e) Septic systems (including but not limited to tanks/fields, sani-pumps and toilets) are maintained and functioning	daily or more often when required
f) Heating/cooling systems and building electrical systems are maintained and functioning	daily or more often when required
g) All required supplies are available	daily or more often when required
h) Picnic tables and benches are maintained (including but not limited to wood varnished and cement sealed) and readily available	annually or more often when required
i) Rest Area facilities are prepared for winter and summer conditions	annually

PM4.4.3.2 Repair or replace Rest Area facilities as follows:

Performance Criteria	Response
a) External building components (including but not limited to exterior walls, foundations, roof, windows and doors) are repaired or replaced	immediately
b) Interior building components (including but not limited to walls, ceilings, floors, fittings and fixtures) are repaired or replaced	immediately
c) Water systems, septic systems, heat/cooling systems and building electrical systems are repaired or replaced	immediately

Changes in Format

6. Applied consistent response times

2.3.2 Routine Maintenance Services

PM2.3.2-1 Remove Debris and obstructions and potential obstructions, which may be a considerable distance upstream or downstream that threaten to potentially damage Highways, where heavy equipment is not required and can be undertaken by handwork as follows:

Performance Criteria	Response by Summer Highway Classification				
	1&2	3	4	5	6&7
a) During High Water Flow	60 min	90 min	2 h	3 h	4 h
b) At other times	2 m	3 m	4 m	6 m	6 m

PM2.3.2-2 Install Rip-rap (or other suitable materials) sufficient to withstand a water flow where there has been or there is potential for Scour and erosion of natural or man-made shores and banks, where heavy equipment is not required and can be undertaken by handwork as follows:

Performance Criteria	Response by Summer Highway Classification				
	1&2	3	4	5	6&7
a) During High Water Flow	60 min	90 min	2 h	3 h	4 h
b) At other times	2 m	3 m	4 m	6 m	6 m

2.3.3 Quantified Maintenance Services

PM2.3.3-1 Remove Debris and obstructions and potential obstructions, which may be a considerable distance upstream or downstream that threaten to potentially damage Highways, where heavy equipment is required as follows:

Performance Criteria	Response by Summer Highway Classification				
	1&2	3	4	5	6&7
a) At all times	2 m	3 m	4 m	6 m	6 m

PM2.3.3-2 Install Rip-rap (or other suitable materials) sufficient to withstand a water flow where there has been or there is potential for Scour and erosion of natural or man-made shores and banks, where heavy equipment is required as follows:

Performance Criteria	Response by Summer Highway Classification				
	1&2	3	4	5	6&7
a) At all times	2 m	3 m	4 m	6 m	6 m

Performance Measures

Performance Measures (PM) identify required work activities and the response for completion.

5.02.2 Routine Maintenance Services

PM5.02.2-1 Place temporary pavement markings within 3 hours of altered permanent pavement markings by the Contractor.

PM5.02.2-2 Eradicate superfluous temporary pavement markings that were previously placed by the Contractor within 3 hours of the permanent pavement marking being placed.

5.02.3 Quantified Maintenance Services

PM5.02.3-1 Restore temporary pavement markings placed by others or place new temporary pavement markings as follows:

Performance Criteria	Response
a) Safety related	24 h
b) Functional related	14 d

Sections in Schedule 1

1. Introduction
2. Routine Maintenance Services Cap
3. Warranty
4. Referenced Documents
5. Definitions
6. General Specifications
7. Local Area Specifications

End Product Specifications Approach

- In the past, told contractor how to perform the work
- Transition began in 2003-2004 agreement
- Applied in some areas, but not all (hybrid approach)
- 2018-2019 agreement more focus on performance measures outlined in specifications
- Contractor now determines best way to do work

Exception to Local Area Specifications (LAS)

- Still focus on how the contractor should perform the work because:
  - The specifications may be new to the contractor and they may not know how to perform the work
  - LAS are typically very specialized, and we need to know how the contractor is performing the work

How to Apply the New Specifications

- Review new specifications for:
  - Litter collection & graffiti removal
  - Rest area
  - Communication
  - Dust control and base stabilization
  - Traffic management
  - Invasive plants
  - Salt containment infrastructure
  - Major event
  - Patrols
  - Winter

Apply New Specifications

APPLY MY KNOWLEDGE Workbook page 21

Scenario 1: You receive a complaint that a restroom at a Class B rest area is messy.

1. Which specifications do you need to refer to?

1. 4.04

2. Name the specification.

2. Rest Area Facility Maintenance

3. What do you notice has changed?

Apply New Specifications

APPLY MY KNOWLEDGE Workbook page 21

3. What do you notice has changed?

- *All rest areas receive the same Class A level of service*
- *The $10K routine maintenance services cap is increased to $15K*
- *We have identified the need to provide preventative maintenance work*
- *We have defined opening and closing dates, which are outlined in Infrastructure Schedule 8*
- *We now have potable water quality monitoring and testing requirements*

CAUTION
FALLING
COWS

Apply New Specifications

APPLY MY KNOWLEDGE Workbook page 22

Scenario 2a): You become aware of a rock slide on the highway that took place at 2 p.m., and the road needs to be closed for clearing.

1. What are the communications requirements for the contractor?

(PM 7.05.2-3 b):

- *Contractor must operate a minimum of 2 social media platforms proactively*
- *Update Drive BC, as per pm 7.05.2-2*
- *Use their social media platforms to communicate the traffic disruption, as per Section 7.05.3 d*

Apply New Specifications

APPLY MY KNOWLEDGE Workbook page 22

Scenario 2b): The contractor receives a complaint via social media from a member of the public.

1. What is the contractor's required response time to the complaint?

24-hour response time to respond to complaints as per Section 7.05.3 e

Apply New Specifications

APPLY MY KNOWLEDGE Workbook page 23

Scenario 3):The contractor is completing their summer plan for base stabilization on an existing gravel road.

1. What are the requirements the contractor must follow?
   - *Contractor is now required to use application rates when applying their product , as per Section 1.04.4 b) i)*
   - *Timing requirement to apply base stabilization is now June 1 as per PM 1.04.3-4 – unless otherwise approved.*
2. What might influence a deviation from the June 1 timing?
   - *Long Winter*
   - *Seasonal load restrictions*
   - *Unavailability of product*

Apply New Specifications

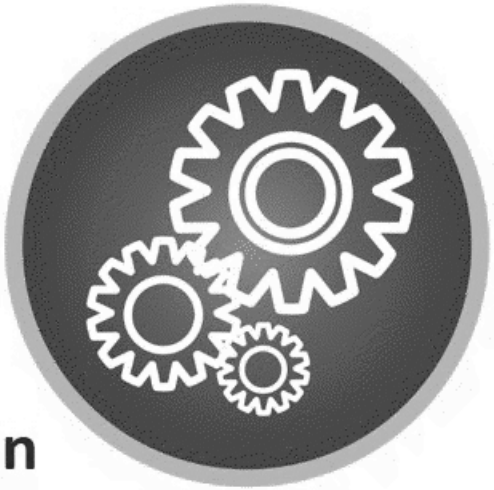

APPLY MY KNOWLEDGE Workbook page 24

Scenario 4): There has been a traffic incident on a four-lane divided highway that has closed all lanes in both directions. It will require traffic management with six traffic personnel, two traffic control supervisors, 10 portable message signs, a toilet and someone driving the queue to provide water and check on motorists.

1. Under the Routine Maintenance Services Cap, what are the contractor's obligations?

Apply New Specifications

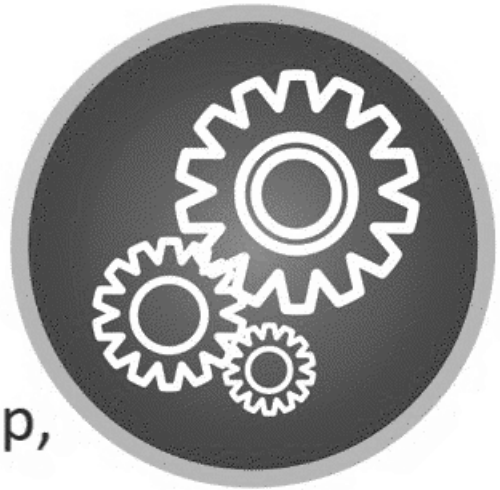

APPLY MY KNOWLEDGE Workbook page 24

1. Under the Routine Maintenance Services Cap, what are the contractor's obligations?

- *Provide a maximum 4 traffic control people and 1 supervisor per site as per Section 5.03.4*
- *A maximum 4 portable message signs per service area as per Section 5.03.4*
- *Follow the new Traffic Management Manual for Work On Roadways as per Section 5.03.3 a). The new traffic management manual was published in 2016 – which is different than the old manual that most people are familiar with.*

5.03 Traffic Management Cost Tracking

Up to Limit of Routine Maintenance Services Cap (For Response and Recovery)

- Costs include:
  - Initial traffic control.
  - Secure and manage scene.
  - Accident/Police investigation.
- Ensure all Routine Maintenance Services costs are documented.

Step 1

Day 1	Traffic Management Response		Costs
Routine Cap (MC Costs)	4 TCP	@ 12hr	$1800.00
	4 CMS Sign	@ 12hr	$900.00
	1 Supervisor	@ 12hr	$900.00
		Pre RMSC Total	**$3,600.00**

Once RMSC reached, follow Additional Works process

Over the Limit of Routine Maintenance Services Cap (Additional Works)

- Must be pre-approved by the District.
- Traffic and management costs above RMSC.
- Must retain and provide all documentation with H200.

Step 2

Additional Works	Traffic Management Response		Costs
	3 TCP	@ 12hr	$1,350.00
	2 CMS Sign	@ 12hr	$450.00
	If exceed RMSC go to H200		**$1,750.00**

Total Costs Carried Over

Chargeable Maintenance Costs (CMC)

- If related to 3rd party or is recoverable.
- Everything (Pre RMSC & Post RMSC) must be included in claim.

QP	Pavement Repair	Tonnes	$682.00
QP	Replace Sign	Unit	$250.00
Electrical	Stree Lamp	Per EMC	$4,000.00
Pre RMSC Total			$3,600.00
Post RMSC Total			$1,750.00
Total Costs			**$10,282.00**

SAMPLE

Copyright

Invasive Plant Specification

- Local Area Specification (LAS) section
- New specification added to meet current environmental requirements
- Directs contractor to:
  - Report invasive plants to the agency conducting invasive plant management for the Province
  - Meet annually with the agency
  - Inspect gravel pits annually to ensure there are no invasive plants
  - Seed areas of exposed soils

Salt Containment Infrastructure Specification

- Local Area Specification (LAS) section
- New specification for areas where a Ministry salt shed is unavailable
- Directs contractor to be responsible for:
  - The safe handling and storage of salt and winter abrasives
  - Maintenance, repair and replacement of salt containment infrastructure
  - The first $50,000 of these repairs/replacements

Major Event Specification

- Consolidates old emergency specifications that included:
  - Flood Control and Washout
  - Mud, Earth and Rockslide
- Structural Damage Response moved to Article 10
- Financial caps have been simplified

Patrols and Winter Specifications

- Of all the specification changes in the new agreement, the Patrols and Winter specifications are the **MOST IMPORTANT** for you to be aware of and understand.

Patrols Specification

APPLY MY KNOWLEDGE Workbook page 27

1. You become aware of a forecast weather event, what would the requirements be for the contractor to patrol a Class 5 road?
2. During the weather event, what would be the requirements for a contractor to patrol a Class 1 and Class 2 highway?
3. During periods of heavy rainfall, high water flow or rapid snow melt, what are the requirements for the contractor to patrol a Class 6 and Class 7 highway?
4. At all times, what are the requirements for a contractor to patrol a Class 4 highway?

Patrols Specification

APPLY MY KNOWLEDGE Workbook page 27

1. You become aware of a forecast weather event, what would the requirements be for the contractor to patrol a Class 5 road?

Patrols Specification

APPLY MY KNOWLEDGE Workbook page 27

1. You become aware of a forecast weather event, what would the requirements be for the contractor to patrol a Class 5 road?

   Every 24 hours

Patrols Specification

APPLY MY KNOWLEDGE Workbook page 27

2. *During the weather event, what would be the requirements for a contractor to patrol a Class 1 and Class 2 highway?*

Patrols Specification

APPLY MY KNOWLEDGE Workbook page 27

2. *During the weather event, what would be the requirements for a contractor to patrol a Class 1 and Class 2 highway?*

   Every 90 minutes

Patrols Specification

APPLY MY KNOWLEDGE Workbook page 27

3. *During periods of heavy rainfall, high water flow or rapid snow melt, what are the requirements for the contractor to patrol a Class 6 and Class 7 highway?*

Patrols Specification

APPLY MY KNOWLEDGE Workbook page 27

3. *During periods of heavy rainfall, high water flow or rapid snow melt, what are the requirements for the contractor to patrol a Class 6 and Class 7 highway?*

   Every 32 hours

Patrols Specification

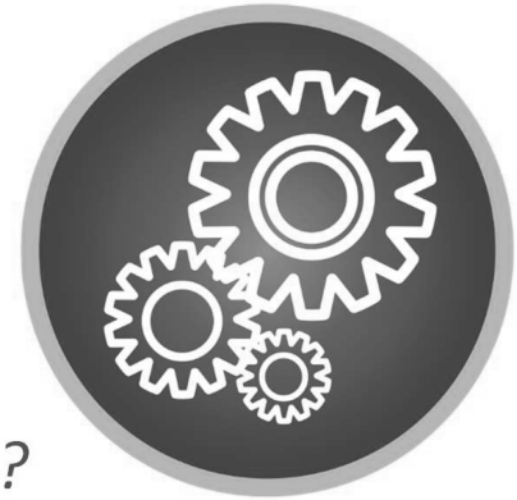

APPLY MY KNOWLEDGE Workbook page 27

4. *At all times, what are the requirements for a contractor to patrol a Class 4 highway?*

Patrols Specification

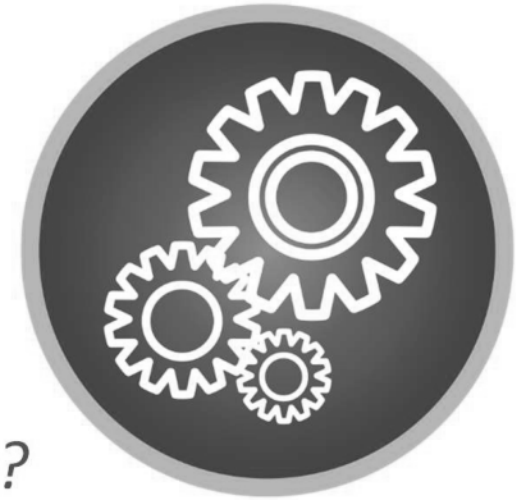

APPLY MY KNOWLEDGE Workbook page 27

4. *At all times, what are the requirements for a contractor to patrol a Class 4 highway?*

   Every 7 days

Copyright

Winter Specifications

- Changes to:
  - Highway Snow Removal
  - Snow and Ice Bonding Prevention and Control
- Minor format changes to:
  - Other Snow Removal and Ice Control
- NOT changed:
  - Winter accumulation table, as per PM 3.01.2-1
  - Removal of slush or broken compact, as per PM 3.01.2-2

Winter Specifications

APPLY MY KNOWLEDGE Workbook page 29

Scenario 1: A snow event has recently ended. Pavement temperature is -8° on a Class A highway.

1. How long does the contractor have to bring the road back to bare?
2. On that same highway, pavement temperature is now -20°, how long does the contractor have to bring the road back to bare?
3. On that same highway, pavement temperature goes to -11° at night and goes up to -7° during the day, then back down to -12° the following night. Now how long does the contractor have to bring the road back to bare?

Winter Specifications

APPLY MY KNOWLEDGE Workbook page 29

1. How long does the contractor have to bring the road back to bare?

Winter Specifications

APPLY MY KNOWLEDGE Workbook page 29

1. How long does the contractor have to bring the road back to bare?

   24 hours

Winter Specifications

APPLY MY KNOWLEDGE Workbook page 29

2. On that same highway, pavement temperature is now -20°, how long does the contractor have to bring the road back to bare?

Winter Specifications

APPLY MY KNOWLEDGE Workbook page 29

2. On that same highway, pavement temperature is now -20°, how long does the contractor have to bring the road back to bare?

   Can stay compact snow until above -9

Winter Specifications

APPLY MY KNOWLEDGE Workbook page 29

3. On that same highway, pavement temperature goes to -11° at night and goes up to -7° during the day, then back down to -12° the following night. Now how long does the contractor have to bring the road back to bare?

Winter Specifications

APPLY MY KNOWLEDGE Workbook page 29

3. On that same highway, pavement temperature goes to -11° at night and goes up to -7° during the day, then back down to -12° the following night. Now how long does the contractor have to bring the road back to bare?

   No black and white answer. What's reasonable?

Winter Specifications

APPLY MY KNOWLEDGE Workbook page 29

Scenario 2: During the snow event, the temperatures are cooling and forecast to be -20° for the next two weeks.

1. What is the contractor's obligation for maintaining compact snow?

PM3.01.2-4 Respond to allowable Compact conditions on Travelled Lanes at all times as follows:

Performance Criteria	Response by Highway Classification				
	A	B	C	D	E
a) Maintain thickness of the Compact surface no greater than 40 mm	48 h	48 h	48 h	3 d	n/a
b) Remove pot-hole in Compact exceeding 25 mm depth and averaging more than 1 per 25 metres of Highway	24 h	24 h	48 h	7 d	n/a
c) Remove rutting in Compact exceeding 25 mm in depth	72 h	72 h	4 d	7 d	n/a

Snow and Ice Bonding Prevention and Control

Changes:

- More emphasis on the contractor being proactive prior to an event
- The maximum size of winter abrasive has changed from 12.5 mm to 9.5 mm

Snow and Ice Bonding

APPLY MY KNOWLEDGE Workbook page 30

Scenario: Weather forecasting predicts a storm in the next few hours.

1. What are the contractor's requirements when it comes to snow and ice bonding?

   a) See requirements in Specification 3.02

   b) Note a new requirement for dealing with polished compact snow in PM3.02.2-6

Questions/comments?

- Specifications
- Routine Maintenance Services Cap
- Quantified Plan
- Additional Maintenance Services

Copyright

MODULE 3
RECORDS AND REPORTING REQUIREMENTS

They're selling them outside.

BRITISH COLUMBIA | Ministry of Transportation and Infrastructure

HIGHWAY MAINTENANCE CONTRACT RENEWAL 2018-19

How to Administer Records and Reporting Requirements

- Maintenance Services Reporting Manual is back
  - Create consistency
  - Standardize format
  - Electronic based centralized reporting system
  - Collate, analyze and report data provincially

How to Administer Records and Reporting Requirements

- 10 video modules available through the Data Room
  - Requirements for the contractor's reporting system
  - Information on collecting records in the field using GPS coordinates
  - Process of collecting, compiling, and submitting records

[redacted]

Work reporting flow chart

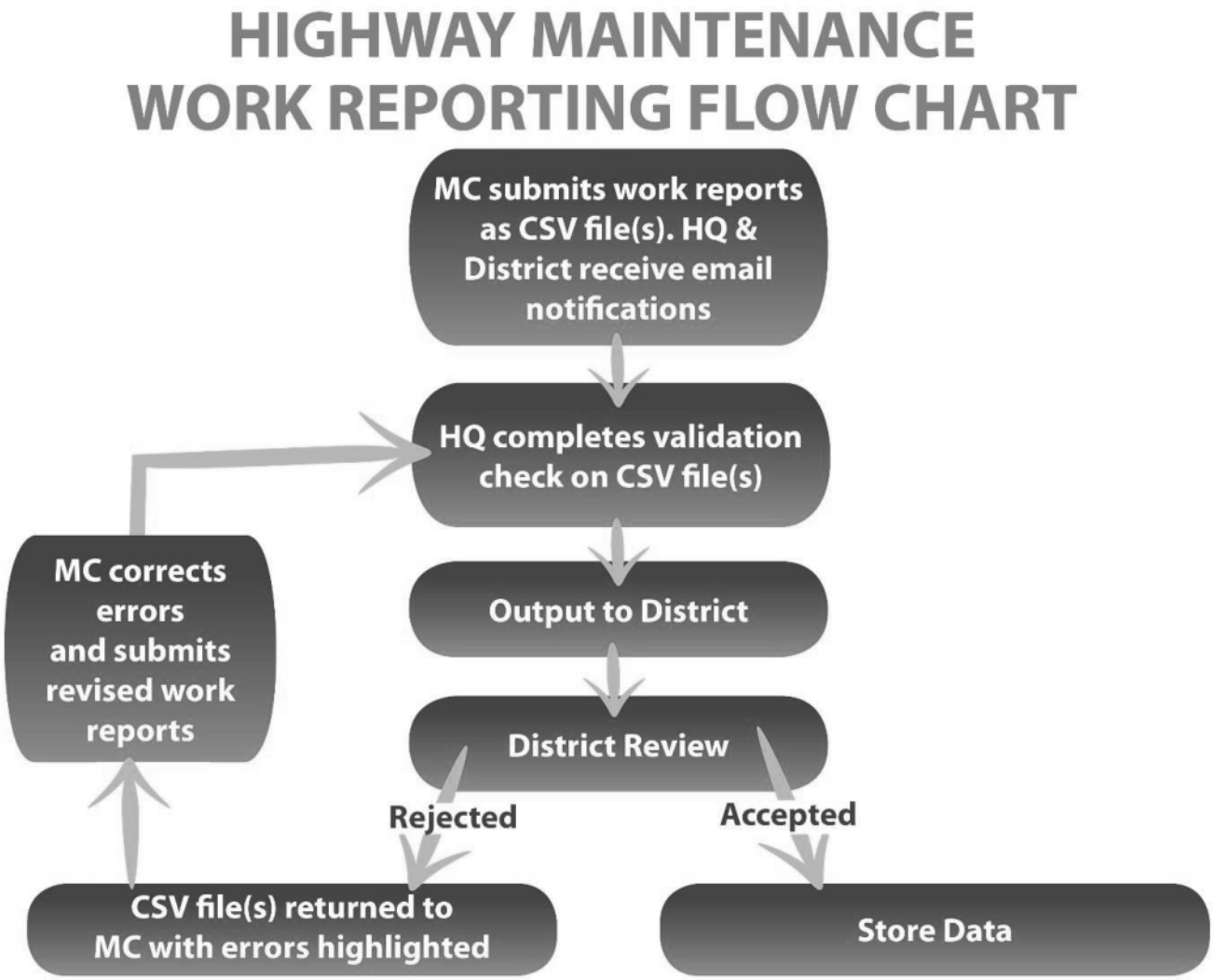

Requirements for Records and Reporting

As outlined in the Maintenance Services Reporting Manual:

- Keep columns the same as the manual, do not add, remove or alter columns.
- Use consistent CSV file names to allow for versioning of the files in SharePoint.
- The manual is subject to change from time to time.
- The most current manual version is in the Data Room.

CSV Work Reporting Validation Checker

CSV Work Reporting Validation Checker Tool

Validating Only Location Specific Data

Restart

1. Select Service Area

SA9 | Kootenay Bou

2. Upload CSV File

\\SFP.IDIR.BCGOV\U13

... Load Data

3. Validate CSV Data

Validate Data

Excel Export

	lighwayUnique	StartLatitude	StartLongitude	EndLatitude	EndLongitude	StructureNumber	SiteNumber	ValueOfWork	Comments	FormatError
▸	)-B-@-00003B	49.0998	-117.703	49.0998	-117.703			$0.00	Ppower Paving O...	Value Of Wor...
	)-B-@-00003B	49.1001	-117.682	49.1001	-117.661			$0.00	Power paving Oc...	Value Of Wor...
	)-B-@-00003B	49.1154	-117.545	49.1154	-117.545			$0.00	Power Paving Oc...	Value Of Wor...
	)-D-@-00036	49.0358	-118.868	49.0723	-118.853			$0.00	Grade reshape Bi...	Value Of Wor...
	)-D-@-00056	49.0595	-118.965	49.1519	-118.909			$0.00	Bill R Oct 21, 2018	Value Of Wor...
	)-B-@-01119	49.0863	-117.75	49.0877	-117.75			$0.00	Ken S Oct 21, 20...	Value Of Wor...
	)-B-@-01244	49.3772	-117.674	49.3736	-117.655			$0.00	Ken S Oct 21, 20...	Value Of Wor...
	)-B-@-01277	49.3962	-117.663	49.3961	-117.656			$0.00	Ken S Oct 21, 20...	Value Of Wor...
	)-D-@-00060	49.0266	-118.95	49.0527	-118.946			$0.00	Bill R Oct 22, 2018	Value Of Wor...
	)-D-@-00064	49.0384	-118.984	49.0405	-118.954			$0.00	Bill R Oct 22, 2018	Value Of Wor...
	)-D-@-00042	49.0608	-118.998	49.1128	-118.976			$0.00	Bill R. Oct 22, 2018	Value Of Wor...
	)-A-@-00006	49.0396	-118.705	49.0505	-118.714			$0.00	Bill R Oct 23, 2018	Value Of Wor...
	)-A-@-00029	49.0989	-118.701	49.1114	-118.723			$0.00	23-Oct-18	Value Of Wor...
	)-B-@-01114	49.0068	-117.617	49.0427	-117.422			$0.00	Ken S Oct 23, 20...	Value Of Wor...
	)-A-@-00047	49.0794	-118.677	49.0625	-118.597			$0.00	Bill R Oct 24, 2018	Value Of Wor...
	)-B-@-01342	49.0391	-117.606	49.0367	-117.507			$0.00	Ken S Oct 24, 20...	Value Of Wor...
	)-D-@-00135	49.0476	-119.12	49.1526	-119.237			$0.00	Bill R Oct 28, 2018	Value Of Wor...
	)-D-@-00009	49.1074	-119.274	49.1327	-119.227			$0.00	Bill R Oct 29, 2018	Value Of Wor...

Export-20181114-1433084691.xlsx - Excel

M93 | 117.7416

	A	B	C	D	E	F	G	H	I	J	K	L	M	N	O	P	Q	R	S	T
1	RecordTyp	ServiceAr	RecordNu	TaskNumb	ActivityNu	StartDate	EndDate	Accomplis	UnitOfMe	PostedDate	HighwayU	StartLatitu	StartLongi	EndLatitu	EndLongit	StructureI	SiteNumb	ValueOfW	Comment	FormatError
2	Q	9	WO-100		101300		########	3	tonne	2018-11-05	09-B-@-0(	49.0998	-117.703	49.0998	-117.703			$0.00	Ppower P	Value Of Work is Mandatory When Applicable. Value amount needed.;
3	Q	9	WO-101		101300		########	3	tonne	2018-11-05	09-B-@-0(	49.1001	-117.682	49.1001	-117.661			$0.00	Power pa	Value Of Work is Mandatory When Applicable. Value amount needed.;
4	Q	9	WO-102		101300		########	3	tonne	2018-11-05	09-B-@-0(	49.1154	-117.545	49.1154	-117.545			$0.00	Power Pa	Value Of Work is Mandatory When Applicable. Value amount needed.;
5	Q	9	WO-11		103301		########	4	RK	2018-11-01	09-D-@-0(	49.0358	-118.868	49.0723	-118.853			$0.00	Grade res	Value Of Work is Mandatory When Applicable. Value amount needed.;

Submission Date: November 13, 2018
Attached Files:

1. Original Contractor Files
2. Processed Work Report File
3. KML File(s) – Google Earth File containing located work reporting records – this file can be used in 'Maps.me' for use in the field
4. Records Submitted – 92
5. Format Errors – 3
6. Location Error – 0
7. Successful - 89

The Processed Work Report File contains all data from the original Quantified submission along with additional processed information

The screenshot below is an example of the additional processed information and an explanation provided below.

Format Error: will indicate the type of error that occurred and prevented further processing (this would require re-submission with correct data entered for these errors)
Located: will indicate "yes" if the record has processed successfully and been spatially located – these records will be reflected in the attached .kml files
Location Error: will indicate "error" if the record did not successfully pass through the spatial processing (this would require field re-collection for these errors)
Meas: identifies the distance along the route to the start point of the work accomplished

FormatError	Located	LocationError	MEAS
	yes		10.89120974
	yes		0.223425
	yes		0.120804417
	yes		10.89120974
	yes		0
	yes		0.011439034
	yes		0
	yes		0
Invalid Start Longitude Value;Value Of Work is a Mandatory Field for Record Type 'Q';			
Invalid Start Longitude Value;Value Of Work is a Mandatory Field for Record Type 'Q';			
Invalid Start Longitude Value;Value Of Work is a Mandatory Field for Record Type 'Q';			

Successfully located point activities in kml format – part of the package that District Staff will receive

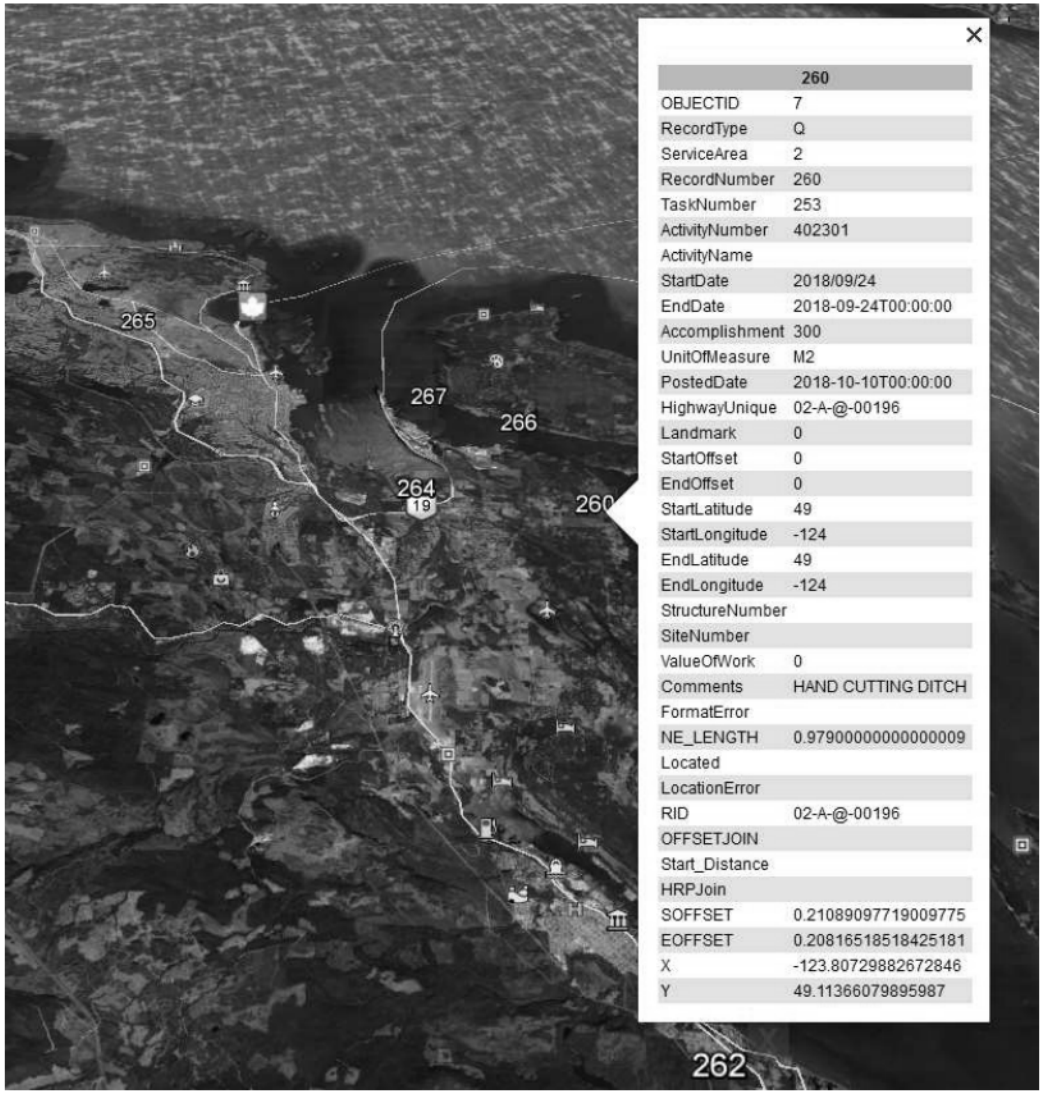

260	
OBJECTID	7
RecordType	Q
ServiceArea	2
RecordNumber	260
TaskNumber	253
ActivityNumber	402301
ActivityName	
StartDate	2018/09/24
EndDate	2018-09-24T00:00:00
Accomplishment	300
UnitOfMeasure	M2
PostedDate	2018-10-10T00:00:00
HighwayUnique	02-A-@-00196
Landmark	0
StartOffset	0
EndOffset	0
StartLatitude	49
StartLongitude	-124
EndLatitude	49
EndLongitude	-124
StructureNumber	
SiteNumber	
ValueOfWork	0
Comments	HAND CUTTING DITCH
FormatError	
NE_LENGTH	0.97900000000000009
Located	
LocationError	
RID	02-A-@-00196
OFFSETJOIN	
Start_Distance	
HRPJoin	
SOFFSET	0.21089097719009775
EOFFSET	0.20816518518425181
X	-123.80729882672846
Y	49.11366079895987

Requirements for Records and Reporting

- Outlined in Article 15
- Contractor responsible for electronic reporting (Automated Vehicle Tracking)
    - Real-time electronic mapping
    - Report time and location of service vehicles
    - Provide Ministry with 24/7 access to information via hyperlink

Requirements for Records and Reporting

- Contractor must follow standard provincial electronic reporting format
- Examples of activities that must be reported electronically (there are ~ 200):
  - Ditching
  - Mowing
  - Snow plowing

Requirements for Records and Reporting

- Contractors are required to electronically report incidents on the highway such as:
  - Rock fall
  - Wildlife collisions
  - Major events

Requirements for Records and Reporting

- The contractor is also now required to report updates to three types of inventory:
  - Signs
  - Culverts
  - Cattle guards
- All changes are to be picked up using GPS coordinates.
- Data contractor provides is used to update CHRIS.

[redacted]

[redacted]

Records BINGO

APPLY MY KNOWLEDGE Workbook page 35

Refer to the five-by-five matrix handout that is provided. There are 25 record requirements described. In your table team, identify when each record requirement is due. Complete as many as you can in the time provided.

Records BINGO

Answers

1	2	3	4	5
6	7	8	9	10
11	12	13	14	15
16	17	18	19	20
21	22	23	24	25

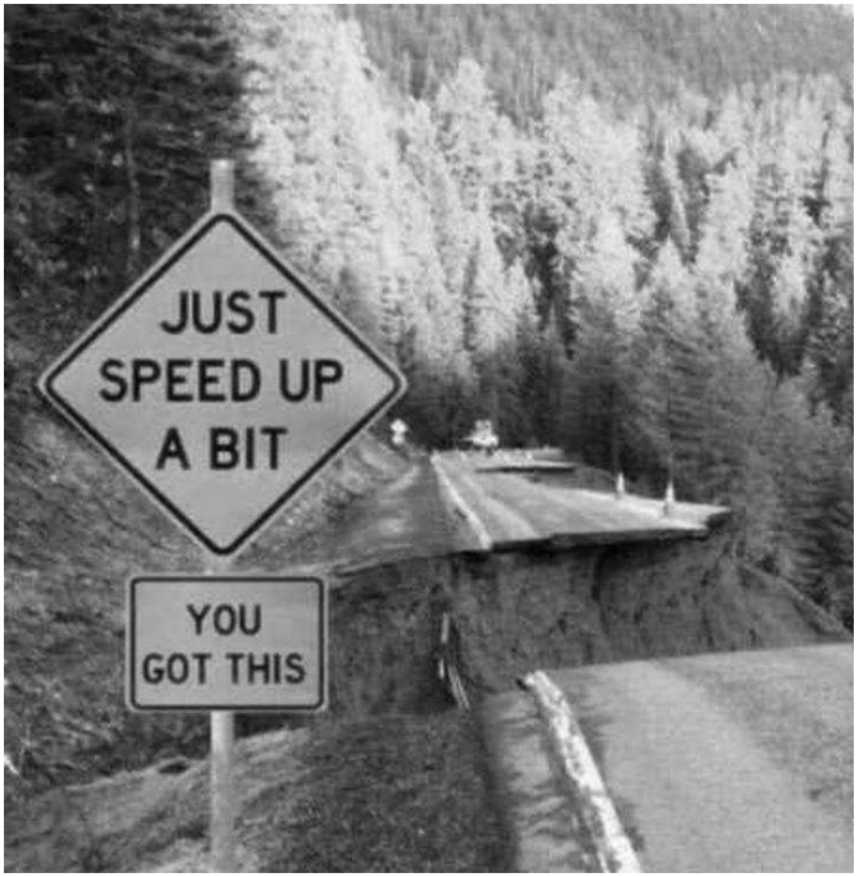

Questions, comments, key learnings

COURSE WRAP UP

Thank You!

BRITISH COLUMBIA

Ministry of Transportation and Infrastructure

HIGHWAY MAINTENANCE CONTRACT RENEWAL 2018-19

2018/19

HIGHWAY MAINTENANCE CONTRACT ADMINISTRATION

Training Course for Ministry Staff and Maintenance Contractors

PARTICIPANT WORKBOOK

BRITISH COLUMBIA | Ministry of Transportation and Infrastructure

HIGHWAY MAINTENANCE CONTRACT RENEWAL 2018-19

The *2018/19 Highway Maintenance Contract Administration* training course was developed by the Ministry of Transportation and Infrastructure in collaboration with Urban Systems Ltd.

URBAN
systems

CONTENTS

Welcome and Introduction 5

Understanding the Workbook 5

Background 6

Module 1 – Apply Key Concepts for Working Well Together 7

Why is collaboration so important? 8

How We Can Work Together – Concepts for Collaboration 8

- Be reasonable and fair 8
- Focus on stakeholder satisfaction 10
- Be good community partners 10
- Partner on urgent work priorities 11
- Follow the Quality Management System 11
- Quantified Plans 11
- Partner in Innovation 11
- Fair Administration of the Agreement 11

Module 2 – Understand and work within the specifications 14

Changes in the format 15

End Product Specifications Approach 19

Why the Exception to Local Area Specifications (LAS)? 19

How to Apply the New Specifications 20

Rest Area Specification 21

Communication Specification 22

Dust Control and Base Stabilization Specification 23

Traffic Management Specification 24

Invasive Plant Specification 25

Salt Containment Infrastructure Specification 25

Major Event Specification 25

The Importance of Patrols and Winter Specifications 26

Patrols Specification 27

Winter Specifications 28

- What hasn't changed? 28
- What has changed? 28

Snow and Ice Bonding Prevention and Control Specifications 30

Module 3 – RECORDS AND REPORTING 32

How to Administer Records and Reporting Requirements 33

Work Reporting Flow Chart 34

Requirements for Records and Reporting 34

Copyright

They've got little cards on the table if you want to ask questions.
I'm starting off with: 'When's lunch?'

WELCOME AND INTRODUCTION

Throughout this one-day course, we will be covering information and engaging in a variety of discussions designed to support Ministry staff and maintenance contractors to effectively work together to implement the new 10-year agreement.

If you are not new to working within the Ministry's highway maintenance contracts, we have designed the course to help you hone your skills and knowledge, but also to provide an opportunity for you to share your experience and knowledge with others in the course.

UNDERSTANDING THE WORKBOOK

DID YOU KNOW? Interesting facts related to the 2018/19 Highway Maintenance Agreement.

NEW IN THE AGREEMENT Additions and/or changes to the 2018/19 Highway Maintenance Agreement.

GLOSSARY Some of the definitions of terms used in the new agreement.

APPLY MY KNOWLEDGE Course activities for you to complete individually or in a group.

RESOURCES References and links to additional information on the topic.

WHAT DOES THIS MEAN IN MY WORLD? A place to write your own thoughts and insights on how you might apply a concept or idea to circumstances within your service area.

Background

All highways and structures in the province of B.C. have been maintained by private contractors since 1988. There are 28 designated service areas throughout the province. Together contractors:

- Maintain more than 47,500 kilometres of highway and 2,800 structures
- Provide maintenance services 24 hours a day, seven days a week
- Provide a broad range of services including winter maintenance, surface maintenance, drainage maintenance, roadside maintenance, traffic maintenance, bridge maintenance, and highway patrol
- Are responsible for identifying, planning and prioritizing these services
- Must ensure that they provide these services in accordance with the specifications set out in the highway maintenance agreement

RESOURCES

You can find a map showing all 28 designated maintenance service areas in BC on the Ministry's website here: https://www2.gov.bc.ca/assets/gov/driving-and-transportation/transportation-infrastructure/highway-bridge-maintenance/highway-maintenance/draft_boundary_maps_web_20180118.pdf

The value of the agreements within the 28 designated service areas totals approximately $400 million a year. A total of 26 agreements will be awarded between 2018-2019 before the existing contracts expire and the final RFP will be awarded in 2021.

MODULE 1 – APPLY KEY CONCEPTS FOR WORKING WELL TOGETHER

Copyright

Get these over to the Highway Maintenance Agreement Course right away ... !

After completing this module, you will be able to:

- Identify the importance of collaborating as Ministry staff and maintenance contractors to successfully implement the new highway maintenance 10-year agreement; and,
- Identify the key concepts and actions for collaboration that will support a positive working relationship within your service area.

Why is collaboration so important?

You may be wondering why we have brought Ministry staff and maintenance contractors together for this course. The main reason is to underscore the importance of creating a collaborative working relationship and help you develop some tools to support effectively working together over the next 10 years.

There are many reasons why a collaborative approach makes sense.

Inevitably, various challenges will arise over the long-term course of the 2018/2019 Highway Maintenance Agreement. The ability to collaborate and work together is essential. It is important for everyone to be on the same page when we are trying to achieve the same objectives. In the case of Ministry staff and maintenance contractors, we work together to ensure the public (or stakeholder) safety and satisfaction.

When we consider collaborating it's important to remember that maintenance contractors and Ministry staff bring local knowledge to the table because we live and work together in the same community. That shared local knowledge enhances our ability to work effectively together.

APPLY MY KNOWLEDGE
COLLABORATION

For this exercise, consider what has been your best experiences of collaboration or partnership (could be on the job or another situation).

What are the characteristics of a great partnership or effective collaboration?

How We Can Work Together – Concepts for Collaboration

We know it's important for Ministry staff and maintenance contractors to work together through partnership and collaboration. But HOW do we effectively work together?

We've identified several key concepts for effective collaboration for you to consider as you establish your working relationship and build on it over the next 10 years. These concepts will apply whether you are a Ministry staff member administering the contract or a maintenance contractor responsible for carrying out the agreement specifications.

Be reasonable and fair

When you think of "reasonable and fair" management processes, what comes to mind? Below are a couple of fundamentals that we have thought of.

- ***Get together on a regular basis*** – Collaborative relationships are built on personal relationships. Effective communication is at the heart of effective collaboration. Often, the most effective communication is face-to-face – especially when things get complicated. No one has all the answers and putting our heads together usually results in better solutions. Email and telephone calls are great in some situations, but there's nothing like getting together for ensuring effective collaboration.
- ***Think win-win*** – We are all in the business of doing good work and covering our costs. How we do this looks very different depending on whether you are Ministry staff administering the contract or a contractor who is implementing it. To make the agreement work, we all have our own responsibilities and goals. By understanding and supporting the responsibilities and goals of the other party, without undermining your own, you are thinking win-win.
- ***Use open and honest communication*** – Open and honest communication supports win-win thinking and delivering good work together. Using open and honest communication allows us to understand each other's interests and work toward mutual benefits. Open and honest communication isn't always comfortable. Having difficult conversations is not easy for everyone. Typically, difficult conversations are necessary to communicate with someone when they haven't met expectations or when there is a misunderstanding or disagreement – when things are not going well. Effective communication requires a balance between courage (being gutsy enough to let someone know when there is a problem) and consideration (communicating in a way that is constructive, not destructive). Using open and honest communication helps to resolve issues quickly and prevents them from snowballing into major problems.

Balancing Courage and Consideration

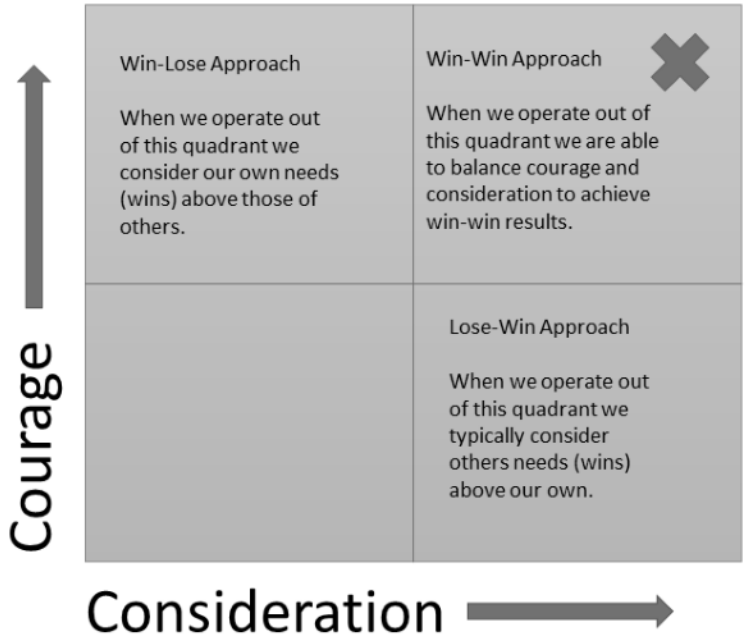

Often, during difficult situations, we can lose focus on win-win thinking. Below is a simple tool, called a T-Chart, that can help you keep win-win at the forefront, especially in preparing for difficult conversations.

T-Chart

Choose a relationship or situation that could benefit from win-win thinking.
Fill in the T-chart by answering the questions below:

What would make this a win for you?	What would make this a win for the other person?

Focus on stakeholder satisfaction

Part of delivering good work together means ensuring our stakeholders (the public) are satisfied. This not only means working together to ensure our roads are well maintained and safe, but also working together to support proactive stakeholder communication. Especially in emergency situations or severe weather circumstances, stakeholders rely on us to provide timely, accurate information. It's important to continually be looking for ways to work together to improve stakeholder satisfaction, while at the same time being supportive of each other.

Be good community partners

Building community relationships is an important aspect of our work. Not only do we take a collaborative approach to how we work together as Ministry staff and maintenance contractors, but we also need to take that collaborative approach working with the communities in which we operate. Being involved in our communities and striving to be good corporate citizens, especially in smaller

communities, is a good way to demonstrate the collaborative approach between Ministry and contractors and to develop strong, supportive relationships with communities.

Partner on urgent work priorities

When an emergency happens it's all hands-on deck. When Ministry staff and contractors work together to prepare for and respond to emergencies and urgent work situations it ensures safety for all – especially the public. Establishing a working relationship from the start that is founded on true collaboration and mutual respect will mean partnering in emergencies will come naturally. How your Ministry/contractor team works together to support each other in emergency situations may be a true test of how well your approach to collaboration is developing.

Follow the Quality Management System

Road maintenance is carried out in highly variable conditions. Any quality management system is ultimately intended to provide a predictable, consistent approach regardless of the circumstance. Each maintenance contractor is required to have thought through a quality management system for highway maintenance. The expectation is that maintenance contractors will follow a reasonable, fair and practical approach in delivering highway maintenance services. Likewise, it's important that Ministry staff also use a reasonable, fair and practical approach to administering the agreement.

Quantified Plans

Quantified plans are intended to balance the system needs of the agreement area and are tied to the resources identified in the Service Plan. Typically, quantified plans do not include rehabilitation and/or capital works which would require advance discussion. While maintenance contractors are responsible for developing and managing their work plans, it is important that contractors and Ministry staff work together to identify mutually beneficial solutions that will achieve positive outcomes.

Partner in Innovation

Thomas Edison, the great inventor, once said "There's a way to do it better – find it." Ministry staff and maintenance contractors need to work together to continually explore if there is a better way to do something. Collaborating on innovation requires that we are open to each other's new ideas. Being open to ideas doesn't mean we have to always implement the new ideas. But if we aren't open to at least exploring new ideas, regardless of whose they are, we'll never find a better way.

Fair Administration of the Agreement

Fair administration of the agreement means ensuring a win-win-win approach. It means:

- Maintenance contractors can expect a reasonable return on their investment (to make a profit);
- The Ministry can expect fair value for the money paid to contractors; and,
- The public can expect a reasonable level of service that meets or exceeds the maintenance specifications.

APPLY MY KNOWLEDGE
FLIPCHART COLLABORATION

For this exercise, you will develop a set of actions that will be relevant and specific to your service area for how you plan to collaborate on administering and implementing the 2018/2019 Highway Maintenance Agreement.

You will notice there are six flip charts stationed around the room. One of the concepts for collaboration that we discussed is written at the top of each flip chart, to stimulate discussion and thinking. In your assigned small group, rotate through all five flip charts, writing two or three actions that your Ministry/contractor team can take to foster collaboration under this heading. Be specific. You will spend only two minutes at each flip chart before being prompted to move on. You will notice a sixth flip chart station – with nothing written on it. At this station, write any other ideas for collaborating that you believe will support your regional team in working well together, but that may not fall under the existing five concepts.

Following this exercise, your team will have a list of actions, developed by you and relevant to your service area, to support collaboration as you work together over the next 10 years. We encourage you to review, revise and perhaps add to the list of actions regularly to ensure they are continuing to support your effective collaboration.

WHAT DOES THIS MEAN IN MY WORLD?

Use this space to write your own thoughts and insights on how you might apply a concept or idea to circumstances within your service area.

MODULE 2 – UNDERSTAND AND WORK WITHIN THE SPECIFICATIONS

Copyright

We were talking about Highway Rest Areas and he nodded off ...

After completing this module, you will be able to:

- Recognize changes in the new agreement format
- Apply the new specifications for:
  - Rest areas
  - Communication
  - Dust control and base stabilization
  - Traffic management
  - Invasive plants
  - Salt containment infrastructure
  - Major events
  - Patrols
  - Winter

BRITISH COLUMBIA | Ministry of Transportation and Infrastructure

HIGHWAY MAINTENANCE CONTRACT RENEWAL 2018-19

Changes in the format

There are several format changes in the new agreement. If you worked under any of the Ministry's previous highway maintenance agreements, you will notice things look different in this new agreement. If this is your first time working with the agreement, this review may be helpful in assisting you to navigate the contract.

There are 7 changes in format that we want to draw to your attention.

1. **We've done away with long, wordy specifications**

The old specs were not written in plain language, were often too wordy and included duplicate language. Sometimes the wording required the reader to refer to requirements from another spec. This often meant it took more time than necessary to get at the information needed. Figure 1 shows an example of wording from the old specs.

3.1 Routine Maintenance Services

The Contractor must:

a) maintain and repair all curbs, traffic islands, Roadside and Median barriers and Safety Devices;

b) remove drainage obstructions;

c) re-align barriers as required to ensure safety of the Highway Users; and

d) maintain painted surfaces on curbs, traffic islands, Roadside and Median barriers and Safety Devices;

3.1.1 Performance Time Frames

The Contractor must:

a) start repair of concrete barriers with damage of less than 900 square centimetres of surface area within 3 days from the time the deficiency was detected by or reported to the Contractor;

b) undertake maintenance of areas chipped or scarred by snowplows, other equipment or vandalism within 90 days from the time the deficiency was detected by or reported to the Contractor;

c) repair or replace all wood and steel components if posts are rotted, broken, settled or damaged and/or if steel guardrail is bent, rusted or damaged, within 6 months from the time the deficiency was detected by or reported to the Contractor;

d) restore a smooth, stable condition to broken or Pot-holed traffic island surfaces within 15 days from the time the deficiency was detected by or reported to the Contractor;

e) clean all drainage holes once annually to ensure the free passage of water;

f) notwithstanding 3.1.1 b) above:

i) when a blockage is causing Ponding in the Travelled Lanes, clean affected drainage holes of Debris within 12 hours from the time the deficiency was detected by or reported to the Contractor;

ii) when a blockage is causing a situation that is unsafe or has the potential to become unsafe to the Highway User, clean affected drainage holes of Debris immediately;

g) complete the realignment of curbs, islands and barriers as required to restore the designed alignment within 3 days from the time the deficiency was detected by or reported to the Contractor;

h) treat or paint all wood components every 2 years;

i) notwithstanding 3.1.1 h), treat or paint wood components where wood is exposed or paint is cracked within 9 months from the time the deficiency was detected by or reported to the Contractor; and

j) repaint all previously painted non-wood components once each year or, with prior written approval of the Province, initiate a planned program to eradicate paint on these components as they deteriorate.

3.2 Quantified Maintenance Services

The Contractor must:

a) construct new asphalt and/or concrete curb as directed by the Province;

b) install new barriers at locations as directed by the Province;

c) replace all curbs, traffic islands, Roadside and Median barriers, spillways, and Safety Devices that fail to function as originally designed; and

d) replace concrete barriers with damage in excess of 900 square centimetres or where there is structural damage including cracking and/or breakage.

Figure 1

2. We've removed repetitive phrases

Phrases were often repeated in former versions of the specifications (see Figure 2). For example, "From the time the deficiency was detected or reported to the Contractor…" appeared over 75 times in the old specs and was not consistently applied across classes or was missing.

In this agreement, we've added the interpretation of clauses to the Introduction. For example, the phrase above is explained only once in the introduction and in more detail: "When a performance measure identifies a response to complete a work activity the time begins from when the Contractor detects or was made aware of the condition. This is the maximum allowable response."

The following table establishes the maximum time, from the time the deficiency was detected by or reported to the Contractor, within which the Contractor must complete the repair of the following deficiencies:

a) The following table establishes the maximum time, from the time the deficiency was detected by or reported to the Contractor, within which the Contractor must complete the repair of the following deficiencies:

a) start repair of concrete barriers with damage of less than 900 square centimetres of surface area using material of the same type and quality as the existing installation, or by using an epoxy repair product approved in writing by the Province, within 3 days from the time the deficiency was detected by or reported to the Contractor;

g) undertake maintenance of areas chipped or scarred by snowplows, other equipment or vandalism within 90 days from the time the deficiency was detected by or reported to the Contractor;

a) immediately, from the time the deficiency was detected by or reported to the Contractor, notify the Province of build up of sedimentation and damage to drainage appliances; and

d) remove Danger Trees within 7 days from the time the deficiency was detected by or reported to the Contractor;

Figure 2

3. All information on one topic is now in one place

Previously, the requirements for communications, for example, were scattered throughout the specs so you were often unsure whether you had all the information you needed (see Figure 3).

a) notify the Province immediately of any incidents of damage and report any indications of potential risk of structural failure; the Province may conduct an assessment;

c) report to the Province any hazardous or observable condition beyond the Right-of-way that is not covered by the Maintenance Agreement or this Maintenance Specification.

a) report Highway condition information in Drive BC in accordance with the Drive BC Web Input Utility User Manual; and ensure condition information remains current;

k) inspect the asphalt surface annually and report any defects (cracks, chipped edges, Pot holes or base failure) to the Province;

h) report to the Province upon detection or notification, any conditions which effect the Highway in performing its designed function but which are not specifically identified in these Maintenance Specifications.

b) communicate any conditions leading to Highway closures, lane closures, Traffic Delays and/or adverse weather that could lead to unsafe Highway conditions, in accordance with the Provincial Incident Response and Travel Advisory Messaging Protocol;

c) immediately report to the Province any hazardous or observable condition beyond the Right-of way that is not covered by the Maintenance Agreement or the Maintenance Specifications.

Reporting to Province, public and stakeholders specified across specifications

If all in one place, very clear what are requirements at all times

Figure 3

Now, it's very clear what the requirements are in all circumstances because the specs continually point back to the one place where the requirements can be found.

4. **Specification format is easier to follow, and now included in one place:**

   The specification format includes:

   - Outcome – the Province's expectations
   - The Service (Routine or Quantified) – the performance measures and maximum response for completion
   - Specific requirements – additional requirements to support delivery of the maintenance activity
   - Notes – this is any supplementary information
   - Materials and/or procedures
   - Routine maintenance service cap
   - Warranty – references if the warranty applies

4.5 Fence Maintenance

4.5.1 Outcome

Restore the functionality of fences.

4.5.2 Quantified Maintenance Services

PM4.5.2-1 Repair or construct fences as follows:

Performance Criteria	Response
a) Initiate temporary repairs to restore functionality to damaged fences that are potentially unsafe along a Schedule 1 or Schedule 2 Highway	immediately
b) Initiate temporary repairs to restore functionality to damaged Speciality Fences that are potentially unsafe	immediately
c) Complete permanent repairs	7 days
d) Construct new Speciality Fences	30 days

Notes:

1) Schedule 1 and Schedule 2 Highways are defined in the *Motor Vehicle Act* Regulations, B.C. Reg. 26/58 ("Schedule 1 and Schedule 2 Highways");

2) Speciality Fences are inclusive to all Highways; and

3) Repairs are only to be competed for fences that have been damaged because of a motor vehicle incident, acts of vandalism, fallen trees from the Right-of-way and Major Events. As stewards of the Highway, the Contractor is expected to work with adjacent third parties to resolve damaged fences that are their responsibility to repair.

4.5.3 Materials and/or Procedures

Refer to Section 1.6 of the Introduction.

Additional materials and/or procedures requirements are as follows:

a) Permanent repairs are to be completed with the same type of fence material.

Figure 4

5. We've gone from using a lot of text to using tables

We've converted text to tables and consolidated language from Sections 3.1 and 3.11 in all specifications (see Figure 5).

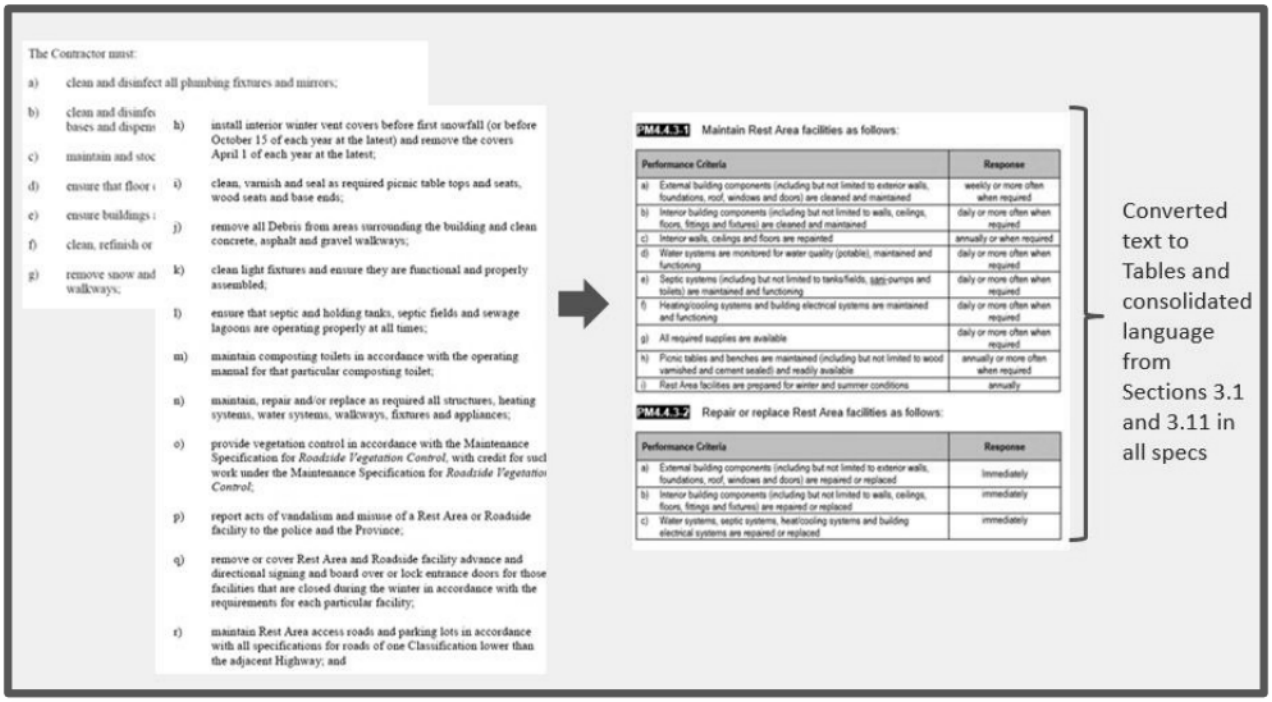

The Contractor must:

a) clean and disinfect all plumbing fixtures and mirrors;

b) clean and disinfe bases and dispen

c) maintain and stoc

d) ensure that floor

e) ensure buildings

f) clean, refinish or

g) remove snow and walkways;

h) install interior winter vent covers before first snowfall (or before October 15 of each year at the latest) and remove the covers April 1 of each year at the latest;

i) clean, varnish and seal as required picnic table tops and seats, wood seats and base ends;

j) remove all Debris from areas surrounding the building and clean concrete, asphalt and gravel walkways;

k) clean light fixtures and ensure they are functional and properly assembled;

l) ensure that septic and holding tanks, septic fields and sewage lagoons are operating properly at all times;

m) maintain composting toilets in accordance with the operating manual for that particular composting toilet;

n) maintain, repair and/or replace as required all structures, heating systems, water systems, walkways, fixtures and appliances;

o) provide vegetation control in accordance with the Maintenance Specification for *Roadside Vegetation Control*, with credit for such work under the Maintenance Specification for *Roadside Vegetation Control*;

p) report acts of vandalism and misuse of a Rest Area or Roadside facility to the police and the Province;

q) remove or cover Rest Area and Roadside facility advance and directional signing and board over or lock entrance doors for those facilities that are closed during the winter in accordance with the requirements for each particular facility;

r) maintain Rest Area access roads and parking lots in accordance with all specifications for roads of one Classification lower than the adjacent Highway; and

PM4.4.3.1 Maintain Rest Area facilities as follows:

Performance Criteria	Response
a) External building components (including but not limited to exterior walls, foundations, roof, windows and doors) are cleaned and maintained	weekly or more often when required
b) Interior building components (including but not limited to walls, ceilings, floors, fittings and fixtures) are cleaned and maintained	daily or more often when required
c) Interior walls, ceilings and floors are repainted	annually or when required
d) Water systems are monitored for water quality (potable), maintained and functioning	daily or more often when required
e) Septic systems (including but not limited to tanks/fields, sani-pumps and toilets) are maintained and functioning	daily or more often when required
f) Heating/cooling systems and building electrical systems are maintained and functioning	daily or more often when required
g) All required supplies are available	daily or more often when required
h) Picnic tables and benches are maintained (including but not limited to wood varnished and cement sealed) and readily available	annually or more often when required
i) Rest Area facilities are prepared for winter and summer conditions	annually

PM4.4.3.2 Repair or replace Rest Area facilities as follows:

Performance Criteria	Response
a) External building components (including but not limited to exterior walls, foundations, roof, windows and doors) are repaired or replaced	immediately
b) Interior building components (including but not limited to walls, ceilings, floors, fittings and fixtures) are repaired or replaced	immediately
c) Water systems, septic systems, heat/cooling systems and building electrical systems are repaired or replaced	immediately

Converted text to Tables and consolidated language from Sections 3.1 and 3.11 in all specs

Figure 5

6. **We've applied consistent response times** (see Figure 6)

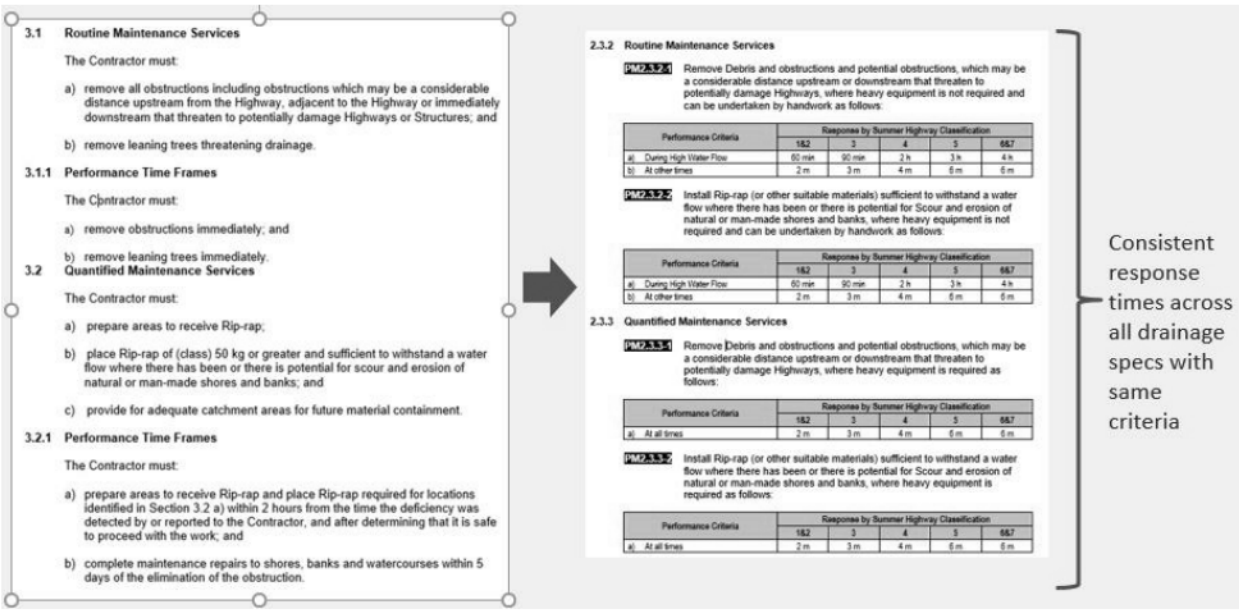

3.1 **Routine Maintenance Services**

The Contractor must:

a) remove all obstructions including obstructions which may be a considerable distance upstream from the Highway, adjacent to the Highway or immediately downstream that threaten to potentially damage Highways or Structures; and

b) remove leaning trees threatening drainage.

3.1.1 **Performance Time Frames**

The Contractor must:

a) remove obstructions immediately; and

b) remove leaning trees immediately.

3.2 **Quantified Maintenance Services**

The Contractor must:

a) prepare areas to receive Rip-rap;

b) place Rip-rap of (class) 50 kg or greater and sufficient to withstand a water flow where there has been or there is potential for scour and erosion of natural or man-made shores and banks; and

c) provide for adequate catchment areas for future material containment.

3.2.1 **Performance Time Frames**

The Contractor must:

a) prepare areas to receive Rip-rap and place Rip-rap required for locations identified in Section 3.2 a) within 2 hours from the time the deficiency was detected by or reported to the Contractor, and after determining that it is safe to proceed with the work; and

b) complete maintenance repairs to shores, banks and watercourses within 5 days of the elimination of the obstruction.

2.3.2 **Routine Maintenance Services**

PM2.3.2.1 Remove Debris and obstructions and potential obstructions, which may be a considerable distance upstream or downstream that threaten to potentially damage Highways, where heavy equipment is not required and can be undertaken by handwork as follows:

Performance Criteria	Response by Summer Highway Classification				
	1&2	3	4	5	6&7
a) During High Water Flow	60 min	90 min	2 h	3 h	4 h
b) At other times	2 m	3 m	4 m	6 m	6 m

PM2.3.2.2 Install Rip-rap (or other suitable materials) sufficient to withstand a water flow where there has been or there is potential for Scour and erosion of natural or man-made shores and banks, where heavy equipment is not required and can be undertaken by handwork as follows:

Performance Criteria	Response by Summer Highway Classification				
	1&2	3	4	5	6&7
a) During High Water Flow	60 min	90 min	2 h	3 h	4 h
b) At other times	2 m	3 m	4 m	6 m	6 m

2.3.3 **Quantified Maintenance Services**

PM2.3.3.1 Remove Debris and obstructions and potential obstructions, which may be a considerable distance upstream or downstream that threaten to potentially damage Highways, where heavy equipment is required as follows:

Performance Criteria	Response by Summer Highway Classification				
	1&2	3	4	5	6&7
a) At all times	2 m	3 m	4 m	6 m	6 m

PM2.3.3.2 Install Rip-rap (or other suitable materials) sufficient to withstand a water flow where there has been or there is potential for Scour and erosion of natural or man-made shores and banks, where heavy equipment is required as follows:

Performance Criteria	Response by Summer Highway Classification				
	1&2	3	4	5	6&7
a) At all times	2 m	3 m	4 m	6 m	6 m

Consistent response times across all drainage specs with same criteria

Figure 6

End Product Specifications Approach

You can see in the new agreement, focus on the end product specifications is the approach that is taken almost all of the time (see exception to LAS below). While in the past we took the approach of telling the contractor how to perform the work, after the 2003-2004 agreement we started to transition to an end product specifications approach.

This approach was applied in some areas of the previous agreement, but not all of them. In the 2003-2004 agreement, the contractor sometimes determined the best way to do the work and sometimes the Ministry did – it was a hybrid approach.

In the 2018-2019 agreement, however you will see we more focus on the end product specifications approach. The focus is now on performance measures as outlined in the specifications. The contractor now determines the best way to do the work.

Why the Exception to Local Area Specifications (LAS)?

There are LAS in all service areas (e.g., invasive plant management, salt sheds, highway crossing infrastructure). The reason we still focus on how the contractor should perform the work is because:

- The specifications may be new to the contractor and they may not know how to perform the work; and,
- LAS are typically very specialized, and we need to know how the contractor is performing the work (e.g., Lion's Gate Bridge counter flow).

How to Apply the New Specifications

This section will cover a review of the new specifications for:

- Litter collection and graffiti removal
- Rest area
- Communication
- Dust control and base stabilization
- Traffic management
- Invasive plants
- Salt containment infrastructure
- Major event
- Patrols
- Winter

DID YOU KNOW?

If you are using social media @TranBC is the voice of the ministry online.

Connect with them for guidance and content ideas – they are happy to help.

https://www.tranbc.ca/

APPLY MY KNOWLEDGE
REST AREAS

Working with your table group, read the scenario below and answer the following questions. Be prepared to share your thoughts with the larger group.

Scenario 1 – **You receive a complaint that a restroom at a Class B rest area is messy.**

1. Which specifications do you need to refer to?

2. Name the specification.

3. What do you notice has changed?

APPLY MY KNOWLEDGE *(continued)*
COMMUNICATION

Scenario 2a) – You become aware of a rock slide on the highway that took place at 2 p.m., and the road needs to be closed for clearing.

1. What are the communications requirements for the contractor?

Scenario 2b) – The contractor receives a complaint via social media from a member of the public.

1. What is the contractor's required response time to the complaint?

APPLY MY KNOWLEDGE *(continued)*
DUST CONTROL AND BASE STABILIZATION

Scenario 3 – The contractor is completing their summer plan for base stabilization on an existing gravel road.

1. What are the requirements the contractor must follow?

2. What might influence a deviation from the June 1 timing?

APPLY MY KNOWLEDGE
TRAFFIC MANAGEMENT

Scenario 4 – **There has been a traffic incident on a four-lane divided highway that has closed all lanes in both directions. It will require traffic management with six traffic personnel, two traffic control supervisors, 10 portable message signs, a toilet and someone driving the queue to provide water and check on motorists.**

1. Under the Routine Maintenance Services Cap what are the contractor's obligations?

Invasive Plant Specification

The Invasive Plant Specification is contained in the Local Area Specification (LAS) section. It is a new specification that has been added to meet current environmental requirements. It is located in the LAS section because it is more prescriptive in nature. Also, it doesn't meet the format of the other end product specifications because it is not results based.

The specification contains information directing the contractor to:

- Report invasive plants to the agency conducting invasive plant management for the Province;
- Meet annually with the agency conducting invasive plant management for the Province;
- Inspect gravel pits annually to ensure there are no invasive plants; and,
- Seed areas of exposed soils.

Salt Containment Infrastructure Specification

This specification is contained in the Local Area Specification (LAS) section. It is a new specification that has been added and applies only for the areas where a Ministry salt shed is available.

The specification contains information directing the contractor to be responsible for:

- The safe handling and storage of salt and winter abrasives;
- Maintenance, repair and replacement of salt containment infrastructure; and,
- The first $50,000 of these repairs/replacements.

NEW

NEW IN THE AGREEMENT

The Structure Damage Response Specification has been removed and the cap is now described in Article 10 – Damage to Government Property. (Section 10.2)

Major Event Specification

The major events specification consolidates the old emergency specifications that included:

1. Flood Control and Washout; and;
2. Mud, Earth and Rockslide.

The financial caps for those three specifications have been simplified. The changes in the agreement include:

- $10,000 for each occurrence per event site regardless of how many events occur.
- An event site is defined as "separated by 1 kilometre of clear distance from another area affected by a major event for a 48-hour period".
- Each of these $10,000 deductibles for major events contributes to a maximum cap of 2% of the Annual Contract Amount,
    - For example, for a $10.0 million contract, the contractor's risk is limited to $200,000.

The Importance of Patrols and Winter Specifications

Of all the specification changes in the new agreement, the Patrols and Winter specifications are the most important for you to be aware of and understand. Why? With these specs, conditions can change quickly, and contractors need to continually apply these specs to ensure the safety of highway users.

NEW

NEW IN THE AGREEMENT

For Ditch Maintenance hand maintenance work is routine; all heavy equipment maintenance is now quantified; new quantified maintenance activities were created for reporting of side-casting and hauling ditch waste longer distances.

SCHEDULE 1 GENERAL SPECIFICATON 2.01

APPLY MY KNOWLEDGE
PATROLS

Working with your table group, read the scenario below and answer the following questions. The first table to correctly answer all the questions wins.

1. You become aware of a forecast weather event, what would the requirements be for the contractor to patrol a Class 5 road?

2. During the weather event, what would be the requirements for a contractor to patrol a Class 1 and Class 2 highway?

3. During periods of heavy rainfall, high water flow or rapid snow melt, what are the requirements for the contractor to patrol a Class 6 and Class 7 highway?

4. At all times, what are the requirements for a contractor to patrol a Class 4 highway?

Winter Specifications

There are three specs that fall within the Winter Specifications chapter including:

1. Highway Snow Removal;
2. Snow and Ice Bonding Prevention and Control; and,
3. Other Snow Removal and Ice Control.

Aside from some formatting changes to the Other Snow Removal and Ice Control spec, it really hasn't changed all that much. Our focus will be on the first two noted above.

What hasn't changed?

- The winter accumulation table, as per PM 3.01.2-1, remains the same.
- The removal of slush or broken compact, as per PM 3.01.2-2, remains the same.

What has changed?

- Everything else is new or changed.

NEW

NEW IN THE AGREEMENT

For Cattleguard Maintenance there is a now a quantified activity for installation of new cattleguards; cleaning in winter is required only when cattle are present.

SCHEDULE GENERAL SPECIFICATION 1.09

NEW

NEW IN THE AGREEMENT

For Sign System Maintenance the contractor is now required to maintain electronically controlled signs, such as variable speed zone signs and wildlife detection systems.

SCHEDULE GENERAL SPECIFICATION 5.01

APPLY MY KNOWLEDGE
WINTER SPECIFICATIONS

Working with your table group, read the scenario below and answer the following questions. Be prepared to share your thoughts with the larger group.

Scenario 1: **A snow event has recently ended. Pavement temperature is -8° on a Class A highway.**

1. How long does the contractor have to bring the road back to bare?

2. On that same highway, pavement temperature is now -20°, how long does the contractor have to bring the road back to bare?

3. On that same highway, pavement temperature goes to -11° at night and goes up to -7° during the day, then back down to -12° the following night. Now how long does the contractor have to bring the road back to bare?

Scenario 2: During the snow event, the temperatures are cooling and forecast to be -20° for the next two weeks.

1. What is the contractor's obligation for maintaining compact snow?

Snow and Ice Bonding Prevention and Control Specifications

The Winter Specification 3.02 Snow and Ice Bonding Prevention and Control has a few changes worth noting, such as:

- More emphasis on the contractor being proactive prior to an event, using weather forecasting, applying anti-icing chemicals and ensuring the road is prepared before the event occurs
- Restoring traction on travel lanes within response times as per PM 3.02.2-6 by modifying the surface using mechanical, chemical or other winter abrasives
- The maximum size of winter abrasive has changed from 12.5 mm to 9.5 mm

APPLY MY KNOWLEDGE

SNOW AND ICE BONDING PREVENTION AND CONTROL

Scenario: **Weather forecasting predicts a storm in the next few hours.**

1. What are the contractor's requirements when it comes to snow and ice bonding?

WHAT DOES THIS MEAN IN MY WORLD?

Use this space to write your own thoughts and insights on how you might apply a concept or idea to circumstances within your service area.

MODULE 3 – RECORDS AND REPORTING

Copyright

They're selling them outside.

After completing this module, you will be able to:

- Understand and apply the requirements around records and reporting

How to Administer Records and Reporting Requirements

There are a few changes in the new agreement that relate to records and reporting requirements.

You will notice the Maintenance Services Reporting Manual is back. It was included in every contract renewal except the 2003-2004 agreement. While reporting was still required in the current 2003-2004 agreement, the format of reports was not consistent.

The Ministry has reinstituted the reporting manual to:

- Create consistency
- Standardize format
- Create an electronic based centralized reporting system
- Collate, analyze and report data provincially

The Ministry has created a series of 10 video modules to provide an overview of the Maintenance Services Reporting Manual. They are available to you at any time through the Data Room and include information on:

- The requirements for the contractor's reporting system
- Information on collecting records in the field using GPS coordinates
- The process of collecting, compiling, and submitting records

DID YOU KNOW?

The Maintenance Services Reporting Manual (MSRM) is back! You should refer to the manual to ensure the format of your reports are consistent.

RESOURCES

The Ministry has developed a series of 10 videos designed to assist you to understand and comply with the records and reporting requirements of the 2018/19 Highway Maintenance Agreement. You can find them on the Data Room.

RESOURCES

A Quick Start Guide for using the Traffic Management Manual is housed on the Ministry's Data Room.

Work Reporting Flow Chart

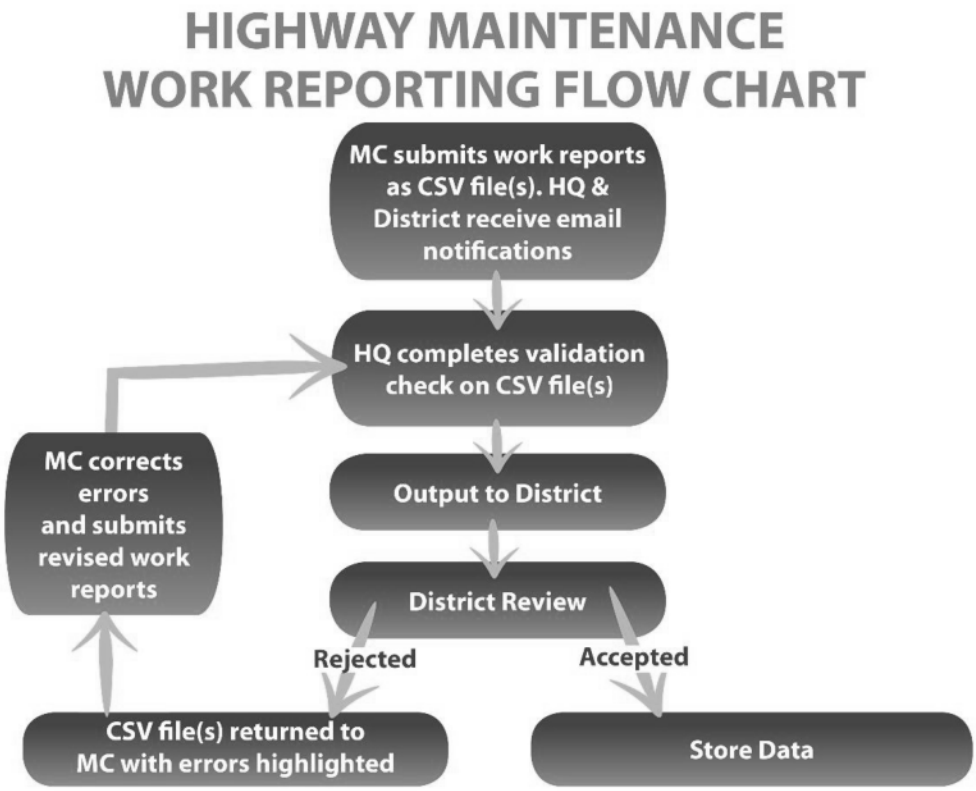

Requirements for Records and Reporting

You will find the requirements for records and reporting are outlined in Article 15. The contractor is now responsible for preparing and maintaining an electronic reporting system, recording all information pertaining to Automated Vehicle Tracking. This system will be required to:

- Provide real-time electronic mapping depicting the service area
- Report at 60-second intervals the time and location of each plow truck, grader and patrol vehicles operating on highways for 100 or more hours in a Contract Year
- Provide a hyperlink to allow the Ministry electronic access to this information at any time

DID YOU KNOW?

There is a new Maintenance Services Reporting Manual which is available on the Data Room.

The contractor must now follow a standardized provincial electronic reporting format for specified and other related work activities. There are over 200 quantified and routine activities that must be reported on electronically, some of which include:

- Ditching
- Mowing
- Snow plowing

Contractors are also required to report out electronically for incidents on the highway such as:

- Rock fall
- Wildlife collisions
- Major events

NEW IN THE AGREEMENT

There are now new tracking requirements in the agreement. The contractor is now required to track additional maintenance services by the activity number. Most activities have a current activity number. For those activities that do not have a number, the Ministry must create one.

SUBSECTION 15.5 c)

The contractor is also now required to report updates to three types of inventory:

- Signs
- Culverts
- Cattle guards

All updates provided by the Contractor are used to update the Ministry's Corporate Highway Resource Information System (CHRIS).

APPLY MY KNOWLEDGE

RECORDS BINGO

For this exercise, you will need to refer to the five-by-five matrix handout that is provided to you. There is a question in each square that refers to a specific record requirement. There are 25 record requirements. In your table team, answer the questions and find as many of the work reporting requirements as possible. Once the time is up, we will go through the answers. Your team will self-score your results. The team that correctly fills in the most squares will win a prize.

Submission Date: November 13, 2018
Attached Files:

1. Original Contractor Files
2. Processed Work Report File
3. KML File(s) – Google Earth File containing located work reporting records – this file can be used in 'Maps.me' for use in the field
4. Records Submitted – 92
5. Format Errors – 3
6. Location Error – 0
7. Successful - 89

The Processed Work Report File contains all data from the original Quantified submission along with additional processed information

The screenshot below is an example of the additional processed information and an explanation provided below.

Format Error: will indicate the type of error that occurred and prevented further processing (this would require re-submission with correct data entered for these errors)
Located: will indicate "yes" if the record has processed successfully and been spatially located – these records will be reflected in the attached .kml files
Location Error: will indicate "error" if the record did not successfully pass through the spatial processing (this would require field re-collection for these errors)
Meas: identifies the distance along the route to the start point of the work accomplished

FormatError	Located	LocationError	MEAS
	yes		10.89120974
	yes		0.223425
	yes		0.120804417
	yes		10.89120974
	yes		0
	yes		0.011439034
	yes		0
	yes		0
Invalid Start Longitude Value;Value Of Work is a Mandatory Field for Record Type 'Q';			
Invalid Start Longitude Value;Value Of Work is a Mandatory Field for Record Type 'Q';			
Invalid Start Longitude Value;Value Of Work is a Mandatory Field for Record Type 'Q';			

CSV Work Reporting Validation Checker

CSV Work Reporting Validation Checker Tool

Validating Only
Location Specific Data

Restart

1. Select Service Area

SA9 | Kootenay Bou

2. Upload CSV File

\\SFP.IDIR.BCGOV\U13

... Load Data

3. Validate CSV Data

Validate Data

Excel Export

	lighwayUnique	StartLatitude	StartLongitude	EndLatitude	EndLongitude	StructureNumber	SiteNumber	ValueOfWork	Comments	FormatError
▶	)-B-@-00003B	49.0993	-117.703	49.0998	-117.703			$0.00	Ppower Paving O...	Value Of Wor...
	)-B-@-00003B	49.1001	-117.682	49.1001	-117.661			$0.00	Power paving Oc...	Value Of Wor...
	)-B-@-00003B	49.1154	-117.545	49.1154	-117.545			$0.00	Power Paving Oc...	Value Of Wor...
	)-D-@-00036	49.0353	-118.868	49.0723	-118.853			$0.00	Grade reshape Bi...	Value Of Wor...
	)-D-@-00056	49.0595	-118.965	49.1519	-118.909			$0.00	Bill R Oct 21, 2018	Value Of Wor...
	)-B-@-01119	49.0863	-117.75	49.0877	-117.75			$0.00	Ken S Oct 21, 20...	Value Of Wor...
	)-B-@-01244	49.3772	-117.674	49.3736	-117.655			$0.00	Ken S Oct 21, 20...	Value Of Wor...
	)-B-@-01277	49.3962	-117.663	49.3961	-117.656			$0.00	Ken S Oct 21, 20...	Value Of Wor...
	)-D-@-00060	49.0265	-118.95	49.0527	-118.946			$0.00	Bill R Oct 22, 2018	Value Of Wor...
	)-D-@-00064	49.0384	-118.984	49.0405	-118.954			$0.00	Bill R Oct 22, 2018	Value Of Wor...
	)-D-@-00042	49.0603	-118.998	49.1128	-118.976			$0.00	Bill R. Oct 22, 2018	Value Of Wor...
	)-A-@-00006	49.0395	-118.705	49.0505	-118.714			$0.00	Bill R Oct 23, 2018	Value Of Wor...
	)-A-@-00029	49.0989	-118.701	49.1114	-118.723			$0.00	23-Oct-18	Value Of Wor...
	)-B-@-01114	49.0063	-117.617	49.0427	-117.422			$0.00	Ken S Oct 23, 20...	Value Of Wor...
	)-A-@-00047	49.0794	-118.677	49.0625	-118.597			$0.00	Bill R Oct 24, 2018	Value Of Wor...
	)-B-@-01342	49.0391	-117.606	49.0367	-117.507			$0.00	Ken S Oct 24, 20...	Value Of Wor...
	)-D-@-00135	49.0475	-119.12	49.1526	-119.237			$0.00	Bill R Oct 28, 2018	Value Of Wor...
	)-D-@-00009	49.1074	-119.274	49.1327	-119.227			$0.00	Bill R Oct 29, 2018	Value Of Wor...

Export-20101114-1433094691.xlsx - Excel

M93 117.7416

	A	B	C	D	E	F	G	H	I	J	K	L	M	N	O	P	Q	R	S	T
1	RecordTyp	ServiceAr	RecordNu	TaskNumI	ActivityN	StartDate	EndDate	Accomplis	UnitOfMe	PostedDate	HighwayU	StartLatit	StartLongi	EndLatitu	EndLongit	Structure	SiteNumb	ValueOfW	Comment	FormatError
2	Q	9	WO-100		101300		########	3	tonne	2018-11-05	09-B-@-0(	49.0998	-117.703	49.0998	-117.703			$0.00	Ppower P	Value Of Work is Mandatory When Applicable. Value amount needed.;
3	Q	9	WO-101		101300		########	3	tonne	2018-11-05	09-B-@-0(	49.1001	-117.682	49.1001	-117.661			$0.00	Power pa	Value Of Work is Mandatory When Applicable. Value amount needed.;
4	Q	9	WO-102		101300		########	3	tonne	2018-11-05	09-B-@-0(	49.1154	-117.545	49.1154	-117.545			$0.00	Power Pa	Value Of Work is Mandatory When Applicable. Value amount needed.;
5	Q	9	WO-11		103301		########	4	RK	2018-11-01	09-D-@-0(	49.0358	-118.868	49.0723	-118.853			$0.00	Grade res	Value Of Work is Mandatory When Applicable. Value amount needed.;

BRITISH COLUMBIA | Ministry of Transportation and Infrastructure

H0200 WORK ORDER
ADDITIONAL MAINTENANCE SERVICES APPROVAL

Project Name _____ Tracking # _____ Revision # _____

Service Area # _____ Maintenance Contractor _____

☐ Routine MS above the Cap (☐ Major Event) ☐ Class 8 or F ☐ More Quantified ☐ Designated First Nations Services ☐ Other

Location Hwy/Road at Intersection or Interchange | Road Classification

From Start To End GPS Location: LAT LONG

Scope of Work: Main project activity

Main project activity description

Work Description: *(Be as detailed as possible– attach information as required)*

Approvals (*attach contractor's Estimated Cost details*)

ESTIMATED COST $ ☐ Direct Cost Plus ☐ Unit Price ☐ Other

WORK START DATE Year Month Day WORK END DATE Year Month Day

X _____ x _____

Print Name: _____ Print Name: _____

AUTHORIZED MINISTRY REPRESENTATIVE
(Confirm limit with Expense Authority Matrix (Construction Contracts) or Corporate Signing Authority System)

AUTHORIZED CONTRACTOR'S REPRESENTATIVE

Date Signed: Year Month Day Date Signed: Year Month Day

MINISTRY'S CONTACT NAME | TELEPHONE | CONTRACTOR'S CONTACT NAME | TELEPHONE

Progress Report: ☐ Daily ☐ Weekly ☐ Monthly ☐ Upon Completion ☐ Other

PAYMENT DETAILS Final Cost: $ _____ *Attach backup documentation.* ***Do not exceed approved estimate****

***A signed/approved revision is required if the original estimate is exceeded**

RESP	S/L	STOB	PROJECT NO.

FOR MINISTRY USE ONLY

☐ Multi-line coding attached

CPS Coding: Product/Info 1: _____

Business Type: _____

Work Activity/Info 2: _____

Cost Type/Info 3: _____

MAJOR EVENT SITE NOTIFICATION REPORT*

Service Area _____

*One report to be completed per site

Date of Event: _____ Foreman Area: _____

YYYY-MM-DD

M/C Project #: _____ Infrastructure Name: _____ Infrastructure #: _____

Landmark #: _____ Start O/S: _____ Finish O/S:_____

GPS Coordinates {Lat/Long Format: d ' " (Deg Min Sec)}:

Latitude: _____ Longitude: _____

Site Number: _____

Project Location Name: _____

Project/ Location Description: _____

_____

Nearest Town: _____ Watercourse Name: _____

Description of Site Infrastructure

Road Name:	Road Number:	Road Type (eg. 2-Lane paved or Gravel)
Bridge Name:	Type	Deck Length
	Structure #	Deck Width
Culvert(s):	Diameter	Length
Multiplate Culvert(s):	Diameter	Headwalls
Rip Rap:	Original Length	Original Vol (m3)
Other: (eg. Trail, parking lot, campsite, walkways etc)		

Description of Damage:

Description or Recommendation of Repairs:

Estimated Cost of Repairs: _____

Payment:

_____	_____	_____
MC Rep Name	**Signature**	**Date**

Major Events Tracking Report

Service Area: _____

Contract Year: _____

Current as of date: _____

Contract Value:	
2% of contract value	$0.00
Deductibles to Date:	$0.00
To Date Job Cost:	$0.00
Total to be Invoiced:	$0.00
Invoiced:	$0.00
Balance Owing:	

MM-DD	Area	Event Location	LM Offsets	(Format: Deg Min Sec)	Event #	Site #	Estimated Cost	Cost	Deductibles	Invoiced	Invoiced	("Complete" or	Comments
						TOTALS	$0.00	$0.00	$0.00	$0.00	$0.00		

Records BINGO

HOW TO PLAY THE GAME:

- **Working with your table group, and using the 2018/19 Highway Maintenance Contract Agreement provided, identify when each of the required records and reports listed are due. Write your answer on the back of the sheet in the corresponding box.**

1 Written particulars of Contractor's location within British Columbia 15.2 (b)	2 Routine Maintenance Services for the prior month 15.5 (a)	3 Major event Site Notification Report 15.6	4 Inspection Record 15.10 (g)	5 Major Event Tracking Report for the prior month 15.5 (e)
6 Rockfall Report (H0207) 15.11	7 A certificate of a senior officer verifying that there has been no material change to the information provided in Schedule 21 ("Contractor Detail") and that all information is current, complete and correct 15.10 (d)	8 Signs System Management Plan(s) 15.10 (i)	9 Wildlife Accident Report (H0107) for the prior month 15.5 (d)	10 Traffic Management Plan(s) 15.10 (h)
11 Contractor information specified in Schedule 21 ("Contractor Detail") 15.10 (c)	12 Quantity survey report prepared by a Qualified Person satisfactory to the Province 15.12	13 Emergency contact particulars (including name, email and phone number) of an authorized representative of the Contractor, for inclusion of the incident response management (IRM) website 15.10 (e)	14 Gravel/Aggregate Usage Report (H1263) for the prior month 15.13	15 Winter Abrasives and Winter Chemicals used in providing Maintenance Services 15.10 (a)
16 Independent Quantity Survey to confirm the quantity of Pit-Run and Granular Material removed from each Gravel Pit or located in Contractor's Stockpiles. 15.14	17 Insurance Premium Adjustment Form attached as Appendix D to Schedule 6 ("Annual Adjustment Process") 15.10 (b)	18 Summaries of all Non-Conformance Reports for the prior month 15.5 (f)	19 Sand and Gravel Operations Notice of Work (H1258) 15.15 (a)	20 Waste Management Plan(s) 15.10 (f)
21 Chargeable Maintenance Cost Report (H0036) & supporting documentation for the direct costs of Damage to Government Property 15.8	22 Quantified maintenance services for the prior month 15.5 (b)	23 Two Year Quantified Work Plan 15.7	24 Quality Management System revisions report 15.9	25 Routine Pit Operations Safety Checklist 15.15 (b)

BRITISH COLUMBIA | Ministry of Transportation and Infrastructure

HIGHWAY MAINTENANCE CONTRACT RENEWAL 2018-19

Records BINGO Answers

- **Write your answers in the numbered boxes.**
- **The team with the highest number of right answers after 5 minutes wins!**

1	2	3	4	5
6	7	8	9	10
11	12	13	14	15
16	17	18	19	20
21	22	23	24	25

COURSE EVALUATION

BRITISH COLUMBIA | Ministry of Transportation and Infrastructure

HIGHWAY MAINTENANCE CONTRACT RENEWAL 2018-19

2018/19 Highway Maintenance Contract Renewal

Day 2 -- Training for Ministry Staff and Maintenance Contractors

The purpose of this questionnaire is to assess the impact of 2018/19 Highway Maintenance Contract Administration course on your knowledge and skills.

Please reflect carefully on the questions. Accurate and complete responses are very important to us and will help us to ensure the course is meeting the needs of participants and the Ministry of Transportation and Infrastructure. Your input will be anonymous, and the data will be treated confidentially.

The information you provide will be used by the Ministry to enhance the effectiveness of this course. We greatly value your input and appreciate your cooperation.

Thank you,

Please provide the following information:

Date of course completion:

The High Impact Evaluation (HIE) Capability Questionnaire is the outcome of a three-year, pan-Canadian research study to investigate the impact of training on job performance, business outcomes and ROI. The Investing in People study, commissioned by the Government of Canada, was conducted by the Centre for Learning Impact in partnership with The Institute of Performance and Learning. This robust collaboration advanced the industry's understanding of workplace learning and empowered the development of more effective evaluation strategies and tools.

THE INSTITUTE FOR PERFORMANCE AND LEARNING | CERTIFICATION MAINTENANCE APPROVED PROGRAM

Author: Lynette Gillis, Ph.D., Centre for Learning Impact, v 6.0 [Adapted and Used with Permission] ©2016 CFLI

COURSE EVALUATION

BRITISH COLUMBIA | Ministry of Transportation and Infrastructure | HIGHWAY MAINTENANCE CONTRACT RENEWAL 2018-19

Learning

1. Rate your knowledge or skill level in each competency areas **before** and **after** participating in this training course. Indicate your response by checking the appropriate box.

Core competencies & learning objectives in Day 1 include:	Before Training					After Training					Not Applicable
	Very Low	Low	Moderate	High	Very High	Very Low	Low	Moderate	High	Very High	
***Module 1**: Apply Key Concepts for working Well Together*	☐	☐	☐	☐	☐	☐	☐	☐	☐	☐	☐
***Module 2**: Effectively Administer/Implement the Specifications*	☐	☐	☐	☐	☐	☐	☐	☐	☐	☐	☐
***Module 3:** Administer Records and Reporting Requirements*	☐	☐	☐	☐	☐	☐	☐	☐	☐	☐	☐

2. To what extent did this course meet your personal knowledge and skill gaps in these areas?

Not at All	To a Small Extent	To a Moderate Extent	To a Great Extent	To a Very Great Extent
☐	☐	☐	☐	☐

If the module did not meet your skill gaps, describe these gaps:

Confidence in Applying Learning

3. How confident are you in your capability to effectively apply the knowledge or skills you learned during this course in your role? Rate your level of confidence below.

Very Low	Low	Moderate	High	Very High
☐	☐	☐	☐	☐

Author: Lynette Gillis, Ph.D., Centre for Learning Impact, v 6.0 [Adapted and Used with Permission] ©2016 CFLI

Training Practices

4. How effective or ineffective did you find the following activities, strategies, or methods used in this course. If you did not participate in the activity or are unfamiliar with the strategy or method, indicate *NA* (not applicable).

Training Practices	Not Effective	Slightly Effective	Moderately Effective	Effective	Very Effective	NA
Learner Workbook	☐	☐	☐	☐	☐	☐
Presentation slides	☐	☐	☐	☐	☐	☐
Videos	☐	☐	☐	☐	☐	☐
Small group or individual exercises	☐	☐	☐	☐	☐	☐
Large group discussions	☐	☐	☐	☐	☐	☐
Comments/suggestions for improvement?						

Author: Lynette Gillis, Ph.D., Centre for Learning Impact, v 6.0 [Adapted and Used with Permission] ©2016 CFLI

Instructional Quality

5. Please rate how effective this training was in achieving the following instructional tasks.

Instructional Tasks*	Not Effective	Slightly Effective	Moderately Effective	Effective	Very Effective	NA
Clearly communicating the learning and performance objectives	☐	☐	☐	☐	☐	☐
Engaging and sustaining your interest	☐	☐	☐	☐	☐	☐
Eliciting your prior knowledge or experience in related areas	☐	☐	☐	☐	☐	☐
Presenting key concepts clearly and logically	☐	☐	☐	☐	☐	☐
Providing sufficient examples	☐	☐	☐	☐	☐	☐
Providing opportunities to practice the application of new knowledge and skills	☐	☐	☐	☐	☐	☐
Providing realistic and work-related practice activities	☐	☐	☐	☐	☐	☐
Providing you with useful feedback during activities	☐	☐	☐	☐	☐	☐
Providing opportunity for collaboration, discussion, and learning from others	☐	☐	☐	☐	☐	☐
Providing useful response to questions, guidance or clarification	☐	☐	☐	☐	☐	☐
Providing opportunity for learning assessment or reflection	☐	☐	☐	☐	☐	☐
Comments/suggestions for improvement?						

Facilitator Effectiveness

6. Overall, how would you rate the quality of the facilitation?

Not Effective	Slightly Effective	Moderately Effective	Effective	Very Effective
☐	☐	☐	☐	☐
Comments/suggestions for improvement?				

Author: Lynette Gillis, Ph.D., Centre for Learning Impact, v 6.0 [Adapted and Used with Permission] ©2016 CFLI

Facilities

7. How would you rate the quality of the course logistics?

Key Content Areas	Not Acceptable	Somewhat Poor	Moderately Good	Good	Very Good
Venue location	☐	☐	☐	☐	☐
Meeting room	☐	☐	☐	☐	☐
Seating arrangement	☐	☐	☐	☐	☐
Sound	☐	☐	☐	☐	☐
Lunch	☐	☐	☐	☐	☐
Break refreshments	☐	☐	☐	☐	☐
Comments/suggestions for improvement?					

Perceived Value

8. To what extent do you perceive this training as . . .

	Not at All	To a Small Extent	To a Moderate Extent	To a Great Extent	To a Very Great Extent
Credible	☐	☐	☐	☐	☐
Practical	☐	☐	☐	☐	☐
Useful for your role	☐	☐	☐	☐	☐

If you indicated "Not at All" or "To a Small Extent," please explain:

_____

_____

9. What was the most effective part of this course for you? Why?

_____

_____

_____

Author: Lynette Gillis, Ph.D., Centre for Learning Impact, v 6.0 [Adapted and Used with Permission] ©2016 CFLI

10. What was least effective part of this course for you? Why?

11. Please provide any additional comments you have regarding this course.

Thank you for taking the time to provide your responses. Your input is important to us and will help the Ministry of Transportation and Infrastructure to continually improve this course.

Author: Lynette Gillis, Ph.D., Centre for Learning Impact, v 6.0 [Adapted and Used with Permission] ©2016 CFLI

RECORD TYPE	SERVICE AI	RECORD NUMBER	TASK NUMBER	ACTIVITY NUMBER	START DATE	END DATE	ACCOMPLI	UNIT OF M	POSTED DATE	HIGHWAY UNIQUE	START LATITUDE	START LONGITUDE	END LATITUDE	END LONGITUDE	STRUCTURE NUMBER	SITE NUMBER	VALUE OF WORK	COMMENTS
R	5	395829		107200	2021-09-12	2021-09-12	9.7	Lkm	2021-09-13	05-B-@-00101								
R	5	395830		107200	2021-09-12	2021-09-12	45.3	Lkm	2021-09-13	05-B-@-00101								
R	5	395880		107201	2021-09-01	2021-09-03	2.5	hours	2021-09-15									
Q	5	395995		107300	2021-09-17	2021-09-17	128	Lin m	2021-09-22	05-A-@-00101	49.55005	-123.98863	49.551	-123.98961			929.7093774	
R	5	395999		107200	2021-09-18	2021-09-18	3	Lkm	2021-09-22	05-A-@-00101								
R	5	396034		107200	2021-09-18	2021-09-18	7	Lkm	2021-09-22	05-B-@-00101								
R	5	396036		107200	2021-09-18	2021-09-18	1.5	Lkm	2021-09-22	05-B-@-00101								
R	5	396132		107200	2021-09-27	2021-09-27	3.346	Lkm	2021-10-01	05-B-@-01118								
R	5	396133		107200	2021-09-27	2021-09-27	30	Lkm	2021-10-01	05-B-@-00101								
R	5	396169		108200	2021-09-01	2021-09-29	5527	num	2021-10-04									
R	5	396186		107200	2021-10-03	2021-10-03	10.1	Lkm	2021-10-04	05-B-@-00101								
R	5	396187		107200	2021-09-21	2021-09-21	12	Lkm	2021-10-05	05-B-@-01119								
R	5	396188		107200	2021-09-20	2021-09-20	26	Lkm	2021-10-05	05-B-@-00101								
R	5	396353		107200	2021-10-15	2021-10-15	4	Lkm	2021-10-19	05-B-@-00101								
R	5	396354		107200	2021-10-15	2021-10-15	4	Lkm	2021-10-19	05-B-@-01108								
R	5	396355		107200	2021-10-15	2021-10-15	8	Lkm	2021-10-19	05-B-@-01118								
R	5	396392		107200	2021-10-19	2021-10-19	10	Lkm	2021-10-21	05-A-@-00221								
R	5	396411		107200	2021-10-18	2021-10-18	1200	Lkm	2021-10-21	05-B-1-01209								
R	5	396484		107200	2021-10-21	2021-10-21	10	Lkm	2021-10-25	05-B-1-01203								
R	5	396485		107200	2021-10-21	2021-10-21	24	Lkm	2021-10-25	05-B-1-01209								
R	5	396486		107200	2021-10-21	2021-10-21	8	Lkm	2021-10-25	05-B-1-01219								
R	5	396487		107200	2021-10-21	2021-10-21	14	Lkm	2021-10-25	05-B-1-01202								
R	5	396488		107200	2021-10-21	2021-10-21	6	Lkm	2021-10-25	05-B-1-01224								
R	5	396519		107200	2021-10-20	2021-10-20	0.25	Lkm	2021-10-25	05-A-@-00223								
R	5	396651		107200	2021-10-26	2021-10-26	10.1	Lkm	2021-11-05	05-B-@-01016								
R	5	396652		107200	2021-10-26	2021-10-26	55	Lkm	2021-11-05	05-B-@-00101								
R	5	396784		108203	2021-11-04	2021-11-04	500	num	2021-11-08									
R	5	396846		107204	2021-10-08	2021-10-27	14.5	hours	2021-11-09									
R	5	396890		107200	2021-11-10	2021-11-10	66	Lkm	2021-11-17	05-A-@-00101								
R	5	396948		107200	2021-11-09	2021-11-09	40	Lkm	2021-11-18	05-B-@-00101								
R	5	397195		107204	2021-11-05	2021-11-28	63	hours	2021-11-30									
Q	5	397268		107300	2021-11-21	2021-11-21	64	Lin m	2021-12-02	05-B-@-00101	49.78177	-124.237567	49.781862	-124.236923			464.8546887	
R	5	397431		101200	2021-11-01	2021-11-29	255	num	2021-12-03									
R	5	397483		107200	2021-11-27	2021-11-27	20	Lkm	2021-12-03	05-B-@-00101								
R	5	397484		107200	2021-11-27	2021-11-27	3	Lkm	2021-12-03	05-B-@-00101								
R	5	397512		108200	2021-11-01	2021-11-28	1280	num	2021-12-06									
R	5	397656		107206	2021-11-04	2021-11-22	4.5	hours	2021-12-09									
R	5	398675		108200	2021-12-01	2021-12-25	261	num	2021-01-04									
Q	5	399040	86502	107301	2022-01-07	2022-01-07	1	sh km	2022-01-12	05-A-@-00101	49.44743	-123.72895	49.44051	-123.72517			69.52067889	
R	5	399205		107200	2022-01-03	2022-01-03	30	Lkm	2022-01-14	05-B-@-00101								
R	5	399569		107200	2022-01-13	2022-01-13	168	Lkm	2022-01-17	05-A-@-00101								
R	5	399912		107200	2022-01-20	2022-01-20	60	Lkm	2022-01-25	05-B-@-00101								
R	5	400049		108204	2022-01-24	2022-01-24	1	num	2022-01-27									
R	5	400099		107200	2022-01-25	2022-01-25	40	Lkm	2022-01-28	05-B-@-00101								
R	5	400100		107200	2022-01-25	2022-01-25	40	Lkm	2022-01-28	05-B-@-00101								
R	5	400249		107204	2022-01-12	2022-01-29	8	hours	2022-01-31									
R	5	400294		107201	2022-01-12	2022-01-30	2.5	hours	2022-02-02									
R	5	400349		101200	2022-01-05	2022-01-31	538	num	2022-02-03									
R	5	400395		108200	2022-01-01	2022-01-31	426	num	2022-02-08									
R	5	400516		107200	2022-02-03	2022-02-03	1	Lkm	2022-02-09	05-A-@-00101								
R	5	400745		107203	2022-02-11	2022-02-11	4.5	hours	2022-02-14									
R	5	400746		107200	2022-02-11	2022-02-11	0.5	Lkm	2022-02-14	05-A-@-00101								
R	5	400751		107200	2022-02-10	2022-02-10	1	Lkm	2022-02-14	05-A-@-00101								
R	5	400953		107204	2022-02-19	2022-02-19	2	hours	2022-02-23									
R	5	400972		107200	2022-02-16	2022-02-16	15	Lkm	2022-02-23	05-B-@-01016								
R	5	400973		107200	2022-02-16	2022-02-16	80	Lkm	2022-02-23	05-B-@-00101								
R	5	401069		107200	2022-02-23	2022-02-23	5	Lkm	2022-02-24	05-B-@-00101								
R	5	401167		107201	2022-02-03	2022-02-25	4	hours	2022-02-28									
R	5	401179		107200	2022-02-05	2022-02-05	8	Lkm	2022-02-28	05-B-@-00904								
R	5	401238		108200	2022-02-01	2022-02-28	113	num	2022-03-09									
R	5	402133		107200	2022-05-03	2022-05-03	30	Lkm	2022-05-09	05-B-@-00101								
R	5	402134		107200	2022-05-03	2022-05-03	8	Lkm	2022-05-09	05-B-@-01016								

R	5	402223	107204	2022-05-05	2022-05-10	3.5	hours	2022-05-12					
R	5	402225	107200	2022-05-10	2022-05-10	1	Lkm	2022-05-12 05-A-1-00159					
R	5	402284	107201	2022-05-12	2022-05-14	2	hours	2022-05-17					
R	5	402296	107203	2022-05-16	2022-05-16	0.5	hours	2022-05-17					
R	5	402316	107200	2022-05-18	2022-05-18	0.5	Lkm	2022-05-19 05-A-@-00101					
R	5	402317	107200	2022-05-18	2022-05-18	0.5	Lkm	2022-05-19 05-A-@-00101					
R	5	402347	107200	2022-05-17	2022-05-17	4	Lkm	2022-05-20 05-A-@-00101					
R	5	402354	107200	2022-05-19	2022-05-19	2	Lkm	2022-05-20 05-A-@-00101					
R	5	402373	107200	2022-05-11	2022-05-11	4	Lkm	2022-05-24 05-A-@-00101					
R	5	402374	107200	2022-05-11	2022-05-11	6	Lkm	2022-05-24 05-A-@-00101					
R	5	402385	107206	2022-05-06	2022-05-15	18.5	hours	2022-05-25					
R	5	402386	107200	2022-05-26	2022-05-26	0.5	Lkm	2022-06-01 05-A-@-00101					
R	5	402387	107200	2022-05-26	2022-05-26	1	Lkm	2022-06-01 05-A-@-00200					
R	5	402388	107200	2022-05-26	2022-05-26	0.5	Lkm	2022-06-01 05-A-@-00219					
R	5	402390	107200	2022-05-27	2022-05-27	1.5	Lkm	2022-06-01 05-A-@-00101					
R	5	402391	107200	2022-05-27	2022-05-27	0.5	Lkm	2022-06-01 05-A-@-00324					
R	5	402392	107200	2022-05-27	2022-05-27	1	Lkm	2022-06-01 05-A-@-00419					
R	5	402394	107200	2022-05-28	2022-05-28	35	Lkm	2022-06-01 05-A-@-00101					
R	5	402395	107200	2022-05-28	2022-05-28	3.2	Lkm	2022-06-01 05-A-@-00324					
R	5	402396	107200	2022-05-28	2022-05-28	1.7	Lkm	2022-06-01 05-A-@-00302					
R	5	402397	107200	2022-05-28	2022-05-28	4	Lkm	2022-06-01 05-A-@-00314					
R	5	402398	107200	2022-05-29	2022-05-29	4	Lkm	2022-06-01 05-A-@-00101					
R	5	402399	107200	2022-05-29	2022-05-29	7	Lkm	2022-06-01 05-A-@-00200					
R	5	402400	107200	2022-05-29	2022-05-29	10	Lkm	2022-06-01 05-A-@-00419					
R	5	402414	107200	2022-05-31	2022-05-31	110	Lkm	2022-06-02 05-A-@-00101					
R	5	402434	108200	2022-05-09	2022-05-27	82	num	2022-06-02					
R	5	402441	107200	2022-05-29	2022-05-29	14	Lkm	2022-06-02 05-B-@-01016					
R	5	402442	107200	2022-05-29	2022-05-29	25	Lkm	2022-06-02 05-B-@-00101					
R	5	402469	107200	2022-05-24	2022-05-24	8	Lkm	2022-06-02 05-A-@-00101					
R	5	402473	107200	2022-05-25	2022-05-25	30	Lkm	2022-06-02 05-A-@-00101					
R	5	402474	107200	2022-05-25	2022-05-25	20	Lkm	2022-06-02 05-A-@-00221					
R	5	402475	107200	2022-05-25	2022-05-25	20	Lkm	2022-06-02 05-A-@-00200					
R	5	402484	107200	2022-06-01	2022-06-01	83	Lkm	2022-06-03 05-A-@-00781					
R	5	402491	107200	2022-06-02	2022-06-02	3	Lkm	2022-06-03 05-A-@-00781					
R	5	402492	107200	2022-06-02	2022-06-02	70	Lkm	2022-06-03 05-A-@-00101					
R	5	402539	107200	2022-06-03	2022-06-03	65	Lkm	2022-06-06 05-A-@-00101					
R	5	402543	107200	2022-06-04	2022-06-04	8	Lkm	2022-06-06 05-A-@-00101					
R	5	402544	107200	2022-06-04	2022-06-04	10	Lkm	2022-06-06 05-A-@-00614					
R	5	402545	107200	2022-06-04	2022-06-04	4	Lkm	2022-06-06 05-A-@-00713					
R	5	402559	107200	2022-06-06	2022-06-06	1	Lkm	2022-06-13 05-A-@-00419					
R	5	402560	107200	2022-06-06	2022-06-06	1	Lkm	2022-06-13 05-A-@-00308					
R	5	402561	107200	2022-06-06	2022-06-06	15	Lkm	2022-06-13 05-A-@-00101					
R	5	402562	107200	2022-06-06	2022-06-06	1	Lkm	2022-06-13 05-A-@-00614					
R	5	402570	107200	2022-06-07	2022-06-07	5	Lkm	2022-06-13 05-A-@-00101					
R	5	402571	107200	2022-06-07	2022-06-07	3	Lkm	2022-06-13 05-A-@-00101					
R	5	402574	107200	2022-06-08	2022-06-08	45.59	Lkm	2022-06-13 05-A-@-00101					
R	5	402580	107200	2022-06-09	2022-06-09	57	Lkm	2022-06-14 05-A-@-00101					
R	5	402586	107200	2022-06-10	2022-06-10	2.65	Lkm	2022-06-14 05-A-@-00101					
R	5	402587	107200	2022-06-11	2022-06-11	0.5	Lkm	2022-06-14 05-A-@-00101					
R	5	402588	107200	2022-06-11	2022-06-11	1	Lkm	2022-06-14 05-A-@-00319					
R	5	402589	107200	2022-06-11	2022-06-11	3.2	Lkm	2022-06-14 05-A-@-00324					
R	5	402590	107200	2022-06-11	2022-06-11	3	Lkm	2022-06-14 05-A-@-00314					
R	5	402591	107200	2022-06-11	2022-06-11	1.5	Lkm	2022-06-14 05-A-@-00302					
R	5	402592	107200	2022-06-11	2022-06-11	1.5	Lkm	2022-06-14 05-A-@-00419					
R	5	402593	107200	2022-06-11	2022-06-11	0.5	Lkm	2022-06-14 05-A-@-00417					
Q	5	402670	107301	2022-06-12	2022-06-12	1.5	sh km	2022-06-20 05-B-@-01016	49.79743	-124.47643	49.835554	-124.492694	109.8131264
R	5	402731	108203	2022-06-20	2022-06-20	1	num	2022-06-28					
Q	5	402757	107300	2022-06-23	2022-06-23	455	Lin m	2022-06-30 05-A-@-00101	49.47305	-123.74738	49.47439	-123.75305	3480.147338
R	5	402772	107200	2022-06-24	2022-06-24	2.05	Lkm	2022-06-30 05-A-@-00614					
R	5	402820	108200	2022-06-09	2022-06-26	204	num	2022-06-30					
R	5	402903	107200	2022-06-29	2022-06-29	10	Lkm	2022-07-04 05-B-@-00101					
R	5	402929	107200	2022-06-30	2022-06-30	10	Lkm	2022-07-04 05-B-@-00101					
Q	5	403054	107301	2022-07-06	2022-07-06	16	sh km	2022-07-13 05-B-@-00101	49.956094	-124.702319	49.886426	-124.554199	1171.340014

From:	TraC
To:	Tyler Lambert
Cc:	Eric Paris; Braun, Michael TRAN:EX
Subject:	Re: Lower Sunshine Coast Sweeping Schedule
Date:	June 9, 2022 9:15:37 PM
Attachments:	Shoulde debris - Marine @ Squamish Lands.HEIC

[EXTERNAL] This email came from an external source. Only open attachments or links that you are expecting from a known sender.

Tyler, as a follow up we want to draw two areas of particular concern to your attention. Attached are two images showing locations on MOTI Highways where organic debris has been allowed to accumulate year-to-year so as to effectively narrow or cover the shoulder. The first image is Marine Drive opposite the Squamish Nation lands; as you will see, the paved shoulder is covered in debris. The second image is the Bypass connector right before North Road; while the debris coverage is slightly less, it still substantially narrows the shoulder. In both instances cyclists are forced out into the lane of travel, raising obvious safety concerns.

We are concerned that the standard sweeping application used by Cap is not sufficient to address this problem. The Bypass photo was taken on or about June 4, after the sweeper had passed through, and illustrates that sweeping alone cannot remove such a large volume of dense accumulated debris. It is our understanding that Cap's maintenance obligations include the removal - by scraping if necessary - of debris on shoulders, and we would appreciate Cap attending to this as soon as feasible. Visiting cyclist numbers are only going to increase, and these are two areas that will see the most riders.

Thanks for your time and attention to this,

Alun

On Sat, Jun 4, 2022 at 10:48 AM TraC <coasttrac@gmail.com> wrote:

> Tyler,
>
> Thanks for the detailed response.
>
> Alun
>
> On Wed, Jun 1, 2022 at 3:43 PM Tyler Lambert <tyler.lambert@capilanohighways.ca> wrote:
>
> > Hi Alun,
> >
> > Answers follow:
> >
> > Where are our Urban Highways and when are these three accumulation removals

performed?

- We only have two small sections of Urban Highway on the Sunshine Coast. These are the portions of Highway 101 within the municipalities that have curb and gutter. So 101 from Reed to Pratt in Gibsons and 101 from a little past Monkey Tree Lane to Shornecliffe in Sechelt.
- The reason for the increased sweeping (3 annually) in these sections is the curb and gutter does not function well for drainage when there are heavy buildups of debris.
- We perform the initial cleaning after winter product application ends generally in April or early to mid May (Just completed a couple of weeks ago). The second cleaning will be done in Summer whenever the accumulations get to the point that the sweeping is required. The final sweeping will be in the fall before the rains set in to make sure the drainage is functioning properly.

g) Other Class 1 and 2 Travelled Lanes, Shoulders, Raised Hard Surfaced Infrastructure, intersections, adjacent to barrier, and pedestrian walkways - May 15 annually
Can you explain what this includes?

- This would include the Langdale bypass and the Highway from Gibsons to Sechelt, through Selma Park and Davis Bay, and from Shornecliffe to Hill Road in West Sechelt.
- Includes travelled lane as required, paved shoulders, and medians/traffic islands.
- We do not have any pedestrian walkways on the coast.
- Note that as this work is only once per year, we try and make sure it is completed after any winter materials or other debris depositing events (i.e. wind and heavy rain events) occur. It is not very effective to clean the infrastructure in mid-March only to have leaves, branches, and sand back on them from spring weather a week later and no more sweepings until the same time next year. This year the weather has been particularly poor so we are still working on a few sections through Roberts Creek where traffic control and additional equipment (backhoe, vacuum sweeper, flush truck are required).

h) All other Highways, Travelled Lanes, Shoulders, Raised Hard Surfaced Infrastructure, intersections, adjacent to barrier, and pedestrian walkways June 15 annually
Can you explain what this includes?

- This would be the remaining portion of highway 101, the collector side road network (i.e. Port Mellon, Marine, Redrooffs, Lower, Garden Bay, etc.) and the other side roads on the coast should they require sweeping (some of the small side roads don't often need cleaning).
- Much of this is complete already. We will be sweeping from Trout Lake to Earls Cove this weekend.

PM1.02.2-5 Remove Accumulations, surface contaminants and chemicals by June 30th of each calendar year from all surfaces.
Can you explain what this includes?

- This local area specification relates to Highway pedestrian and animal overpasses and underpasses specifically.
- We do not currently have any such infrastructure on the Sunshine Coast.
- I believe it was included in all maintenance contracts regardless of whether there were any such structures in case any were built in those areas within the term of the contract.

Hopefully that helps clarify things a bit for you. I will be at the meeting next week if you want to discuss anything further.

Tyler

Capilano Highway Services

From: TraC <coasttrac@gmail.com>
Sent: Wednesday, June 1, 2022 1:06 PM
To: Tyler Lambert <tyler.lambert@capilanohighways.ca>
Cc: Eric Paris <eric.paris@capilanohighways.ca>; Braun, Michael TRAN:EX <michael.braun@gov.bc.ca>; Joey.Tasker@gov.bc.ca
Subject: Lower Sunshine Coast Sweeping Schedule

Tyler,

It is great to see the shoulder sweeping beginning on the Sunshine Coast. For a number of reasons, this year has left our shoulders in a terrible state. As a local advocacy group, we are often asked when the roads will be swept and we just don't know.

Can you please explain when and where the sweepings take place.

Related to 1.07.2 Routine Maintenance Services
f) Urban Highways, and Designated Bike Lanes 3 times annually
Where are our Urban Highways and when are these three accumulation removals performed?
g) Other Class 1 and 2 Travelled Lanes, Shoulders, Raised Hard Surfaced Infrastructure, intersections, adjacent to barrier, and pedestrian walkways - May 15 annually
Can you explain what this includes?
h) All other Highways, Travelled Lanes, Shoulders, Raised Hard Surfaced Infrastructure,

intersections, adjacent to barrier, and pedestrian walkways June 15 annually
Can you explain what this includes?

Related to 1.02.2 Routine Maintenance Services from the Local Area Specification
PM1.02.2-5 Remove Accumulations, surface contaminants and chemicals by June 30th of each calendar year from all surfaces.
Can you explain what this includes?

https://www2.gov.bc.ca/assets/gov/driving-and-transportation/transportation-infrastructure/highway-bridge-maintenance/highway-maintenance/maintenance-agreements/maintenance-specifications/schedule_1a_specifications_revised_2020-02-01.pdf

https://www2.gov.bc.ca/assets/gov/driving-and-transportation/transportation-infrastructure/highway-bridge-maintenance/highway-maintenance/maintenance-agreements/local-area-specifications/sa05_schedule_1b_local_area_specifications_-_final_-_2019.pdf

thanks

Alun

-

Alun Woolliams

TraC Director

Braun, Michael TRAN:EX

From: Tyler Lambert <tyler.lambert@capilanohighways.ca>
Sent: May 9, 2022 9:16 AM
To: Shelley Gagnon; Tasker, Joey TRAN:EX
Cc: Braun, Michael TRAN:EX; Kevin Clarkson
Subject: RE: ATI sweeping

This email came from an external source. Only open attachments or links that you are expecting from a known sender.

Hi Shelley,

Road sweeping occurs every spring following the end of the application of winter materials (sand and salt). The timing is dependant on many factors but generally April/May is a good time for a full sweep. This year given the unseasonably cold weather we are just ramping into our main sweeping program now so you will see sweeping of all the main roads through the month.

There is only one full sweep obligated under the contract. However, there are provisions for additional sweepings under the contract as needed. On the coast, we generally sweep one or two more times per year. The second sweep tends to be around bike to work week and then another in the fall after the first good wind storm puts leaves and debris all over the shoulders.

The ATI paths are swept at the same time as the rest of the infrastructure. However, maintenance responsibilities are dependant on what agency constructed the wide shoulder. If MOTI built it, it is our responsibility to maintain. If SCRD constructed it there are associated maintenance requirements laid out in the permits that were issued to allow for construction. As cyclists generally expect the lanes to be clear at all times I know in the past SCRD has initiated a contract to sweep the shoulders they have constructed and additional two times per year to augment the sweeping we perform. I should also note that the wood post and chain safety barrier installed at a number of locations as part of the construction process are an SCRD maintenance responsibility. They are starting to be in pretty poor shape.

Hopefully that helps clarify timing and responsibility.

Let me know if I can provide any more information.

Tyler
Capilano Highway Services

From: Shelley Gagnon <Shelley.Gagnon@scrd.ca>
Sent: Saturday, May 7, 2022 6:05 PM
To: Joey Tasker <Joey.Tasker@gov.bc.ca>; Tyler Lambert <tyler.lambert@capilanohighways.ca>
Cc: Braun, Michael TRAN:EX <Michael.Braun@gov.bc.ca>; Kevin Clarkson <Kevin.Clarkson@scrd.ca>
Subject: ATI sweeping
Importance: High

Good afternoon Joey and Tyler,
I am wondering if you can provide clarity for me on something. According to folks in our Parks department, MOTI (via Capilano) conducts sweeping 2x per year on roads and also the Active Transportation Infrastructure (walk/bike pathways) that are attached to the road. Is this correct? If so, when do you do this sweeping?

It is Parks understanding that any ATI that has been built on the edge of the roadway, is MOTI's to maintain...is this correct?

I have received several complaints from Area B residents about the walk/bike pathway along Redrooffs Road. As per the picture below, it appears that there has been no sweeping or perhaps the road debris has actually been swept onto the ATI infrastructure?

Can you help clarify roles and responsibilities? Greatly appreciated.

Shelley Gagnon (she/her)
General Manager Community Services, Sunshine Coast Regional District
1975 Field Road, Sechelt, BC V0N 3A1
Phone: 604-885-6800

Stay informed and get involved at www.scrd.ca/letstalk
Visit us at www.scrd.ca
Like us on Facebook
Follow us on Twitter sunshinecoastrd

The Sunshine Coast Regional District is located on the territories of the shíshálh and Sḵwx̱wú7mesh Nations

PRIVILEGED AND CONFIDENTIAL The information transmitted is intended only for the person or entity to which it is addressed and may contain confidential and/or privileged material. If you are not the intended recipient it may be unlawful for you to read, copy, disclose or otherwise use the information in this communication. If you received this transmittal in error, please contact the sender and delete the material immediately.