C R E U S

Engineering

Civil Engineers & Project Managers
#610 EAST TOWER - 221 ESPLANADE WEST, NORTH VANCOUVER BC, V7M3J3
PH: 604-987-9070 WEBSITE: www.creus.ca

PROJECT:

PRIESTLANDS PHASE 2
BC

CLIENT:

PARK PROPERTIES INC.

DRAWING LIST			
DWG #			
KEY-1 SUB E	CONTEXT PLAN		
KEY-3-SUB E	KEYPLAN	PHASE 2	SUBDIVISION LAYOUT E
MWP-1-SUB E	MASTER WATER PLAN	SHEET 1 OF 2	
MWP-2	MASTER WATER PLAN	SHEET 2 OF 2	
SERV-1-SUB E	SERVICING PLAN		
R-1-SUB E	ROADWORKS	ROAD A - SUB E	PLAN AND PROFILE
R-2-SUB E	ROADWORKS	ROAD B - SUB E	PLAN AND PROFILE
R-3-SUB E	ROADWORKS	ROAD C - SUB E	PLAN AND PROFILE
DET-1	STANDARD DETAILS		
DET-2	STANDARD DETAILS		

2021-12-21
ISSUED FOR SUBDIVISION - 34 LOTS

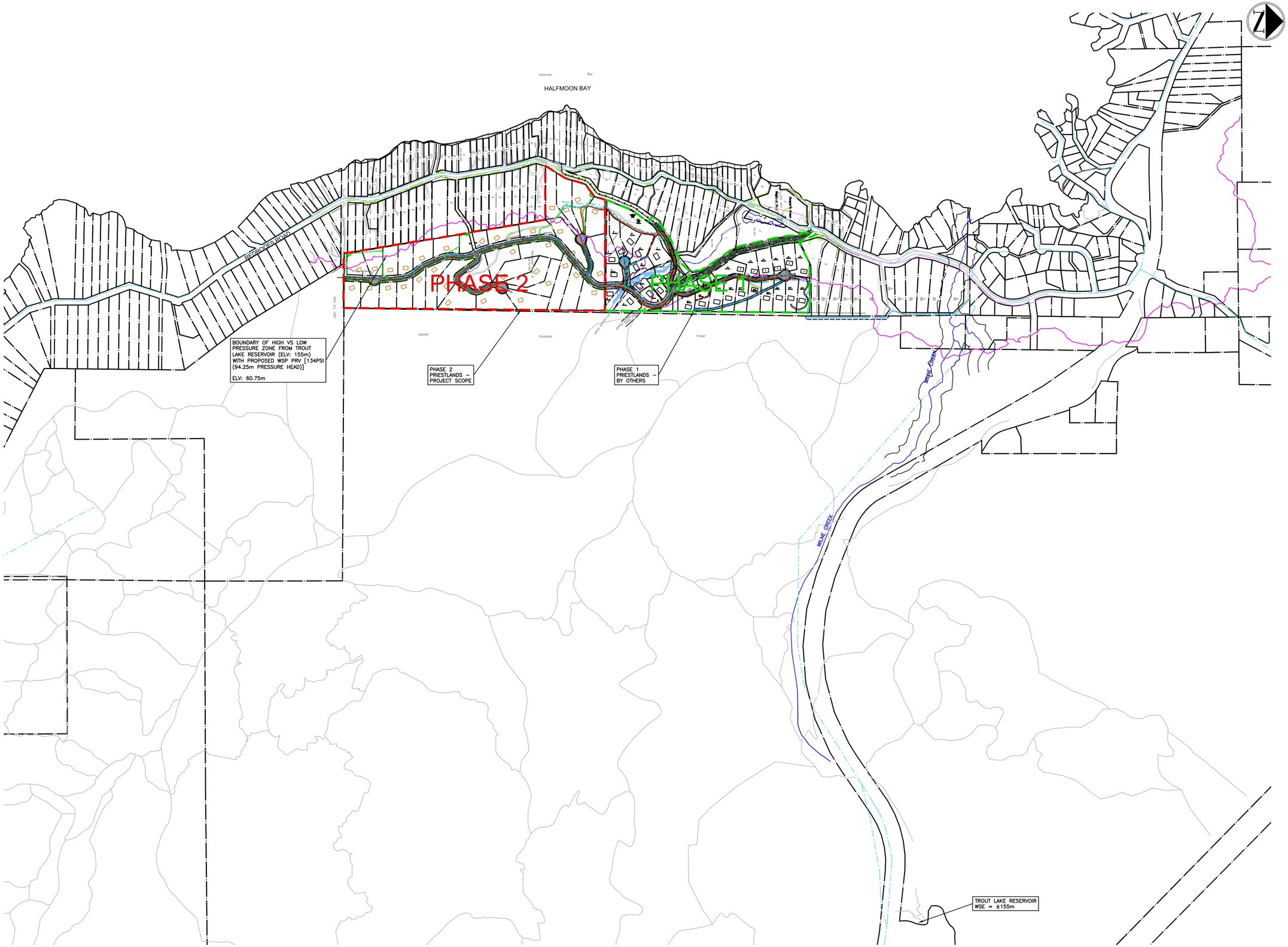

NOT FOR CONSTRUCTION

CREUS Engineering

Civil Engineers & Project Managers
#610 EAST TOWER - 221 ESPLANADE WEST, NORTH VANCOUVER BC, V7M3J3
PH: 604-987-9070 WEBSITE: www.creus.ca

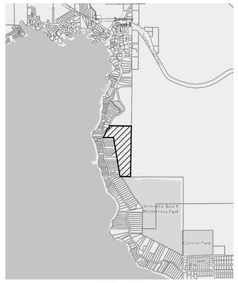

SITE MAP

DRAWING LEGEND

	EXISTING	PROP.	TO BE REMOVED
LEGAL LINE			
EASEMENT			
WATERMAIN			
SANITARY			
STORM			
HYDRO			
TEL			
STREETLIGHT			
GAS			

	EXISTING	PROP.	TO BE REMOVED
FIRE HYDRANT			
GATE VALVE	SV	SV	SV
AIR VALVE			
REDUCER			
INSPECTION CHAMBER			
CATCHBASIN (STD/SI)			
CAP			
MANHOLE	MH	MH	MH
POWER POLE			
STREETLIGHT			

approved

client
PARK PROPERTIES INC.

project
PRIESTLANDS PHASE 2
BC

title
CONTEXT PLAN

no.	(y/m/d)	revision	chk'd
1	21-12-21	ISSUED FOR SUBDIVISION	MHS

current rev. # 1

engineer of record: KBH	scales: hor:1:4000 vert1:4000
designed by: KBH	file no. 21198
drawn by: MHS	drawing no. KEY-1 SUB E
date: 21-04-23	

LOT #	DESCRIPTION	TOTAL AREA (m²)	FRONTAGE (m)	PERIMETER (m)	LANDUSE ZONING	SUBDIV. ZONING
1	LOT	4000		259.05	E	E
2	LOT	4001		269.90	E	E
3	LOT	4001		258.57	E	E
4	LOT	4001		269.08	E	E
5	LOT	4000		296.10	E	E
6	LOT	5550		402.57	E	E
7	LOT	5550		426.43	E	E
8	LOT	5550		323.76	E	E
9	LOT	5550		330.16	E	E
10	LOT	5551		329.30	E	E
11	LOT	5590		474.71	E	E
12	LOT	5551		382.21	E	E
13	LOT	5550		350.70	E	E
14	LOT	5550		322.47	E	E
15	LOT	5551		356.99	E	E
16	LOT	5550		339.56	E	E
17	LOT	5551		395.59	E	E
18	LOT	5551		343.87	E	E
19	LOT	5551		320.59	E	E
20	LOT	6051		370.43	E	E
21	LOT	6050		320.32	E	E
22	LOT	6050		381.00	E	E
23	LOT	6050		430.00	E	E
24	LOT	6077		531.65	E	E
25	LOT	6050		426.54	E	E
26	LOT	4001		291.86	E	E
27	LOT	4001		277.99	E	E
28	LOT	4000		362.60	E	E
29	LOT	4001		272.08	E	E
30	LOT	4000		269.10	E	E
31	LOT	4000		267.52	E	E
32	LOT	4001		268.19	E	E
33	LOT	4001		264.12	E	E
34	LOT	4001		258.81	E	E
	ROAD	25510		2804.40	E	E

AVERAGE LOT AREA = 5002 m²

TOTAL LOT AREA = 170083 m²

Assuming Existing Zoning Subdivision E R2
From SCRD Bylaw 320 Section 406(5):
(Consolidated Oct. 8 2020)

Min. Lot area = 4,000m²
Max. 9,999m²
Avg. 5,000m²

Typical Frontage used = 30.5m (100ft)
Min. Frontage used = 10m (33ft)

Front yard setback = 5m
Front yard setback = 2m
Front yard setback = 1.5m

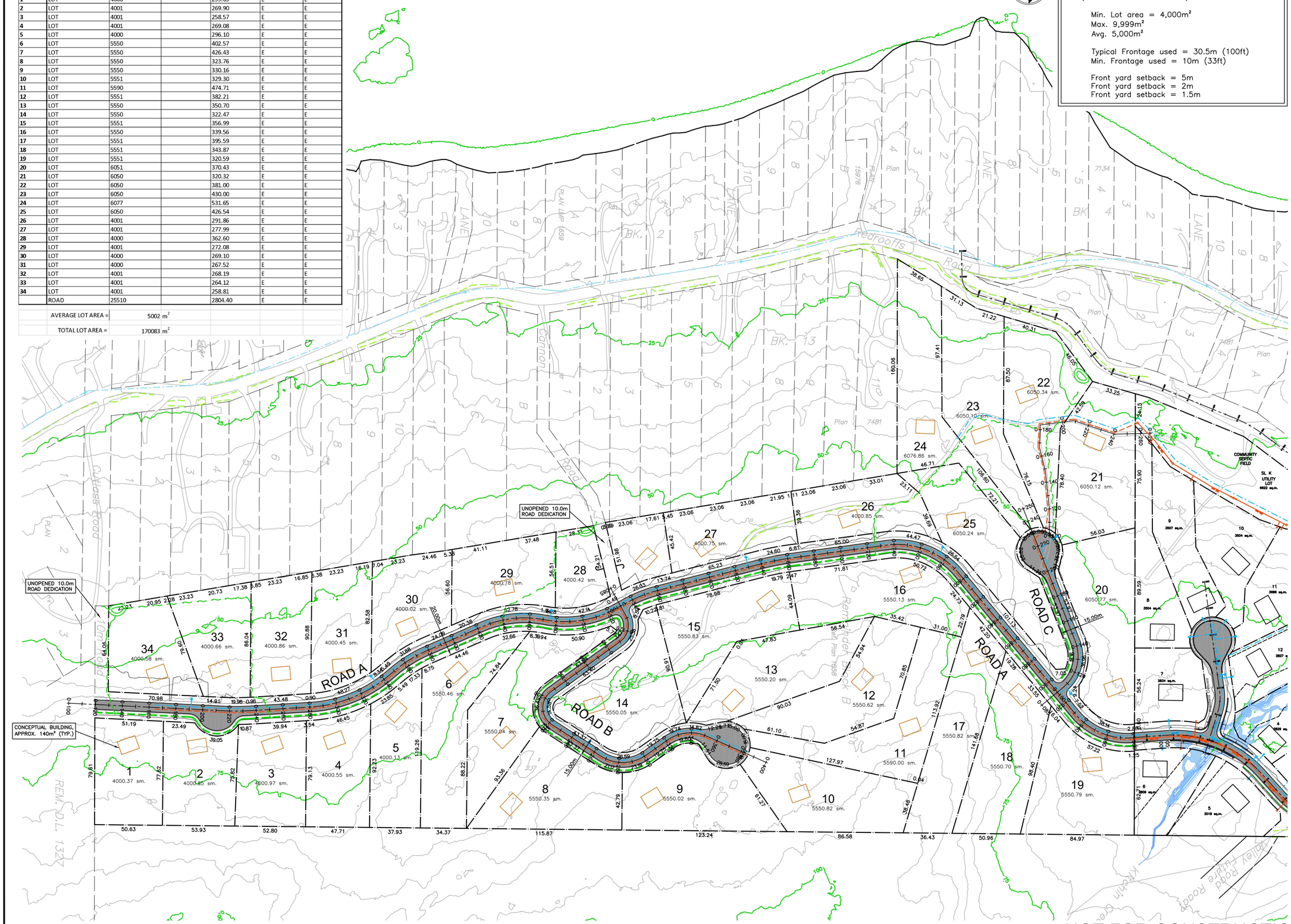

NOT FOR CONSTRUCTION

CREUS Engineering

Civil Engineers & Project Managers
#610 EAST TOWER - 221 ESPLANADE WEST, NORTH VANCOUVER BC, V7M3J3
PH: 604-987-9070 WEBSITE: www.creus.ca

SITE MAP

DRAWING LEGEND

	EXISTING	PROP.	TO BE REMOVED
LEGAL LINE			
EASEMENT			
WATERMAIN			
SANITARY			
STORM			
HYDRO			
TEL			
STREETLIGHT			
GAS			

	EXISTING	PROP.	TO BE REMOVED
FIRE HYDRANT			
GATE VALVE			
AIR VALVE			
REDUCER			
INSPECTION CHAMBER			
CATCHBASIN (STD/SI)			
CAP			
MANHOLE			
POWER POLE			
STREETLIGHT			

approved

client
PARK PROPERTIES INC.

project
PRIESTLANDS PHASE 2
BC

title
KEYPLAN
PHASE 2
SUBDIVISION LAYOUT E

no.	(y/m/d)	revision	chk'd
4	21-12-21	ISSUED FOR SUBDIVISION	MHS
3	21-10-22	UPDATED ROADWORKS	TJV
2	21-06-02	UPDATED PER LIDAR	TJV
1	21-04-23	ISSUED FOR CLIENT REVIEW	TJV

current rev. # 4

engineer of record: KBH	scales: hor:1:1250 vert:1:250
designed by: KBH	file no. 21198
drawn by: TJV	drawing no. KEY-3-SUB E
date: 21-04-23	

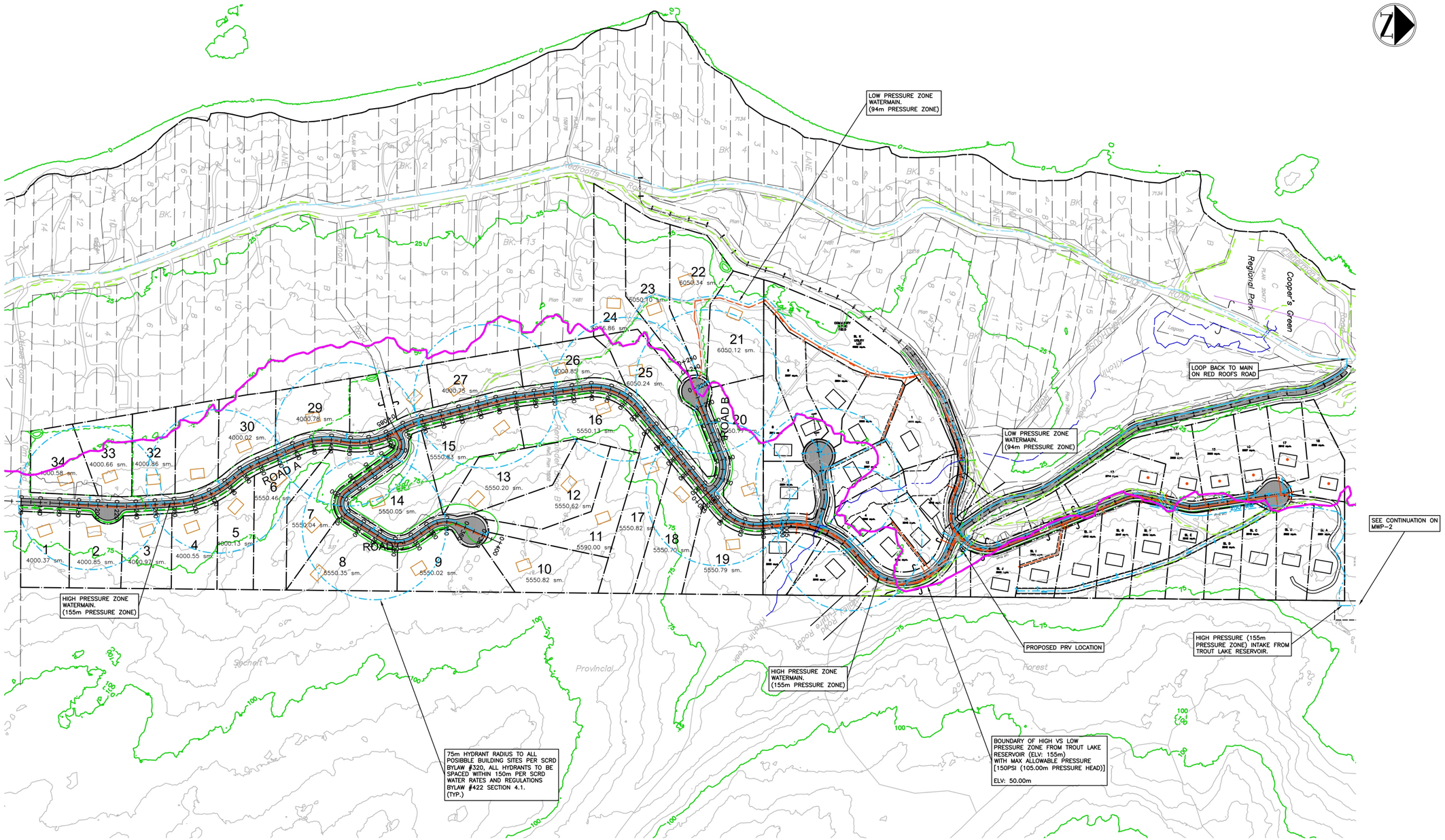

NOT FOR CONSTRUCTION

CREUS Engineering

Civil Engineers & Project Managers
#610 EAST TOWER - 221 ESPLANADE WEST, NORTH VANCOUVER BC, V7M3J3
PH: 604-987-9070 WEBSITE: www.creus.ca

SITE MAP

DRAWING LEGEND

	EXISTING	PROP.	TO BE REMOVED
LEGAL LINE			
EASEMENT			
WATERMAIN			
SANITARY			
STORM			
HYDRO			
TEL			
STREETLIGHT			
GAS			

	EXISTING	PROP.	TO BE REMOVED
FIRE HYDRANT			
GATE VALVE			
AIR VALVE			
REDUCER			
INSPECTION CHAMBER			
CATCHBASIN (STD/SI)			
CAP			
MANHOLE			
POWER POLE			
STREETLIGHT			

approved

client
PARK PROPERTIES INC.

project
PRIESTLANDS PHASE 2
BC

title
MASTER WATER PLAN
SHEET 1 OF 2

no.	(y/m/d)	revision	chk'd
1	21-12-21	ISSUED FOR SUBDIVISION	MHS

current rev. # 1

engineer of record: KBH	scales: hor:1:2000 vert: -
designed by: KBH	file no. 21198
drawn by: MHS	drawing no. MWP-1-SUB E
date: 21-04-23	

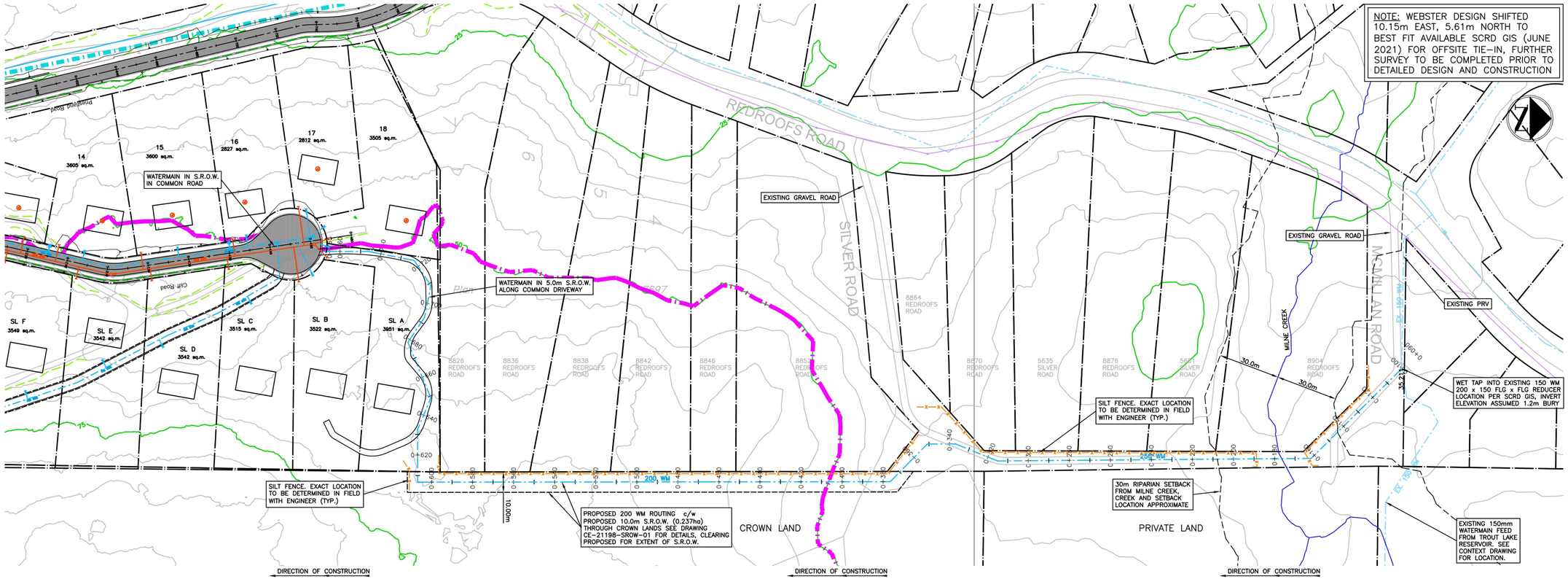

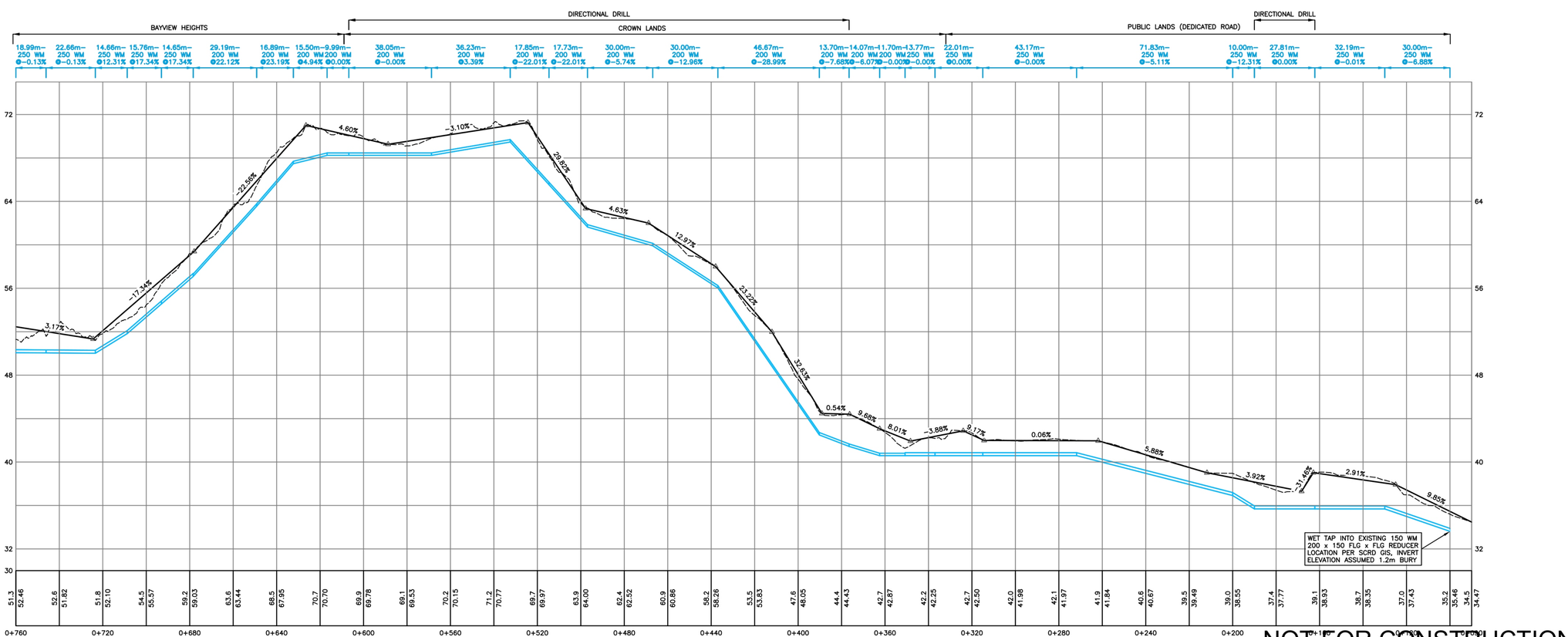

NOT FOR CONSTRUCTION

CREUS Engineering

Civil Engineers & Project Managers
#610 EAST TOWER - 221 ESPLANADE WEST, NORTH VANCOUVER BC, V7M3J3
PH: 604-987-9070 WEBSITE: www.creus.ca

SITE MAP

DRAWING LEGEND

	EXISTING	PROP.	TO BE REMOVED
LEGAL LINE			
EASEMENT			
WATERMAIN			
SANITARY			
STORM			
HYDRO			
TEL			
STREETLIGHT			
GAS			

	EXISTING	PROP.	TO BE REMOVED
FIRE HYDRANT			
GATE VALVE			
AIR VALVE			
REDUCER			
INSPECTION CHAMBER			
CATCHBASIN (STD/SI)			
CAP			
MANHOLE			
POWER POLE			
STREETLIGHT			

approved

PROFESSIONAL ENGINEER K. D. HALY # 28443 BRITISH COLUMBIA CANADA 2021-12-21

client
PARK PROPERTIES INC.

project
PRIESTLANDS PHASE 2
BC

title
MASTER WATER PLAN
SHEET 2 OF 2

no.	(y/m/d)	revision	chk'd
1	21-12-21	ISSUED FOR SUBDIVISION	MHS

current rev. # 1

engineer of record: KBH	scales: hor:1:1000 vert:1:250
designed by: KBH	file no. 21198
drawn by: TJV	drawing no. MWP-2
date: 21-04-23	

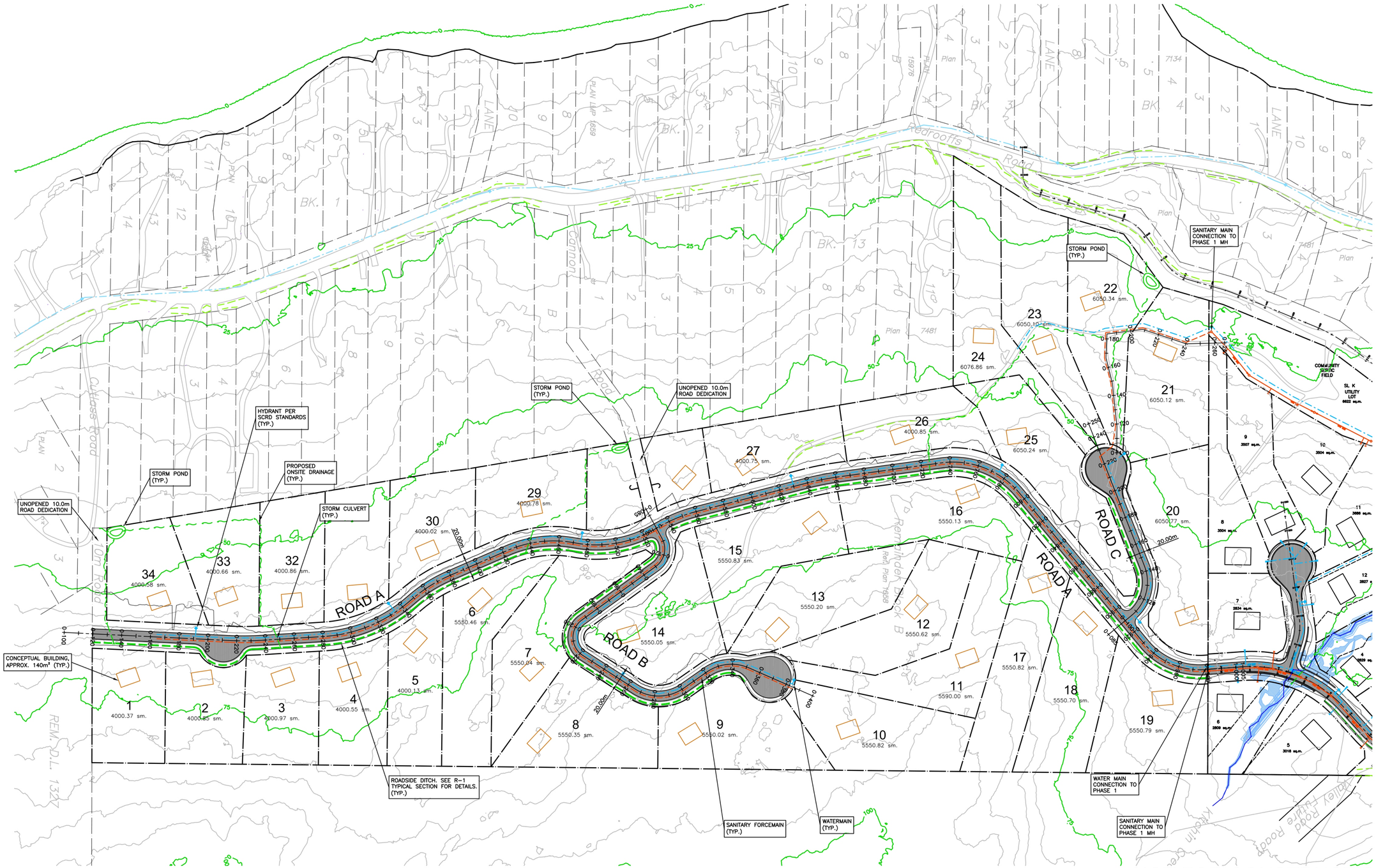

NOT FOR CONSTRUCTION

CREUS Engineering

Civil Engineers & Project Managers
#610 EAST TOWER - 221 ESPLANADE WEST, NORTH VANCOUVER BC, V7M3J3
PH: 604-987-9070 WEBSITE: www.creus.ca

PERMIT TO PRACTICE # 1001543

SITE MAP

DRAWING LEGEND

	EXISTING	PROP.	TO BE REMOVED
LEGAL LINE			
EASEMENT			
WATERMAIN			
SANITARY			
STORM			
HYDRO			
TEL			
STREETLIGHT			
GAS			

	EXISTING	PROP.	TO BE REMOVED
FIRE HYDRANT			
GATE VALVE			
AIR VALVE			
REDUCER			
INSPECTION CHAMBER			
CATCHBASIN (STD/SI)			
CAP			
MANHOLE			
POWER POLE			
STREETLIGHT			

approved

client
PARK PROPERTIES INC.

project
PRIESTLANDS PHASE 2
BC

title
SERVICING PLAN

no.	(y/m/d)	revision	chk'd
1	21-12-21	ISSUED FOR SUBDIVISION	MHS

current rev. # 1

engineer of record: KBH	scales: hor:1:1250 vert: -
designed by: KBH	file no. 21198
drawn by: MHS	drawing no. SERV-1-SUB E
date: 21-04-23	

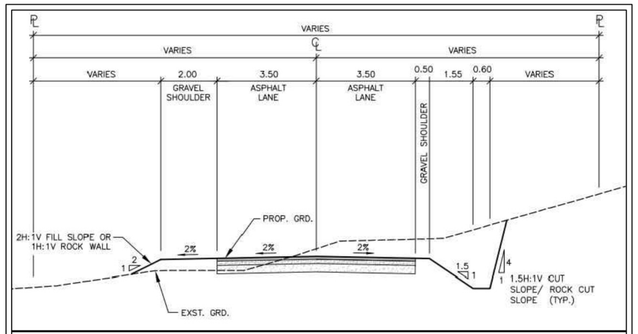

ROAD A – TYPICAL SECTION
SCALE 1:100

Assuming Existing Zoning Subdivision E R2
From SCRD Bylaw 320 Section 406(5):
(Consolidated Oct. 8 2020)

Min. Lot area = 4,000m²
Max. 9,999m²
Avg. 5,000m²

Typical Frontage used = 30.5m (100ft)
Min. Frontage used = 10m (33ft)

Front yard setback = 5m
Front yard setback = 2m
Front yard setback = 1.5m

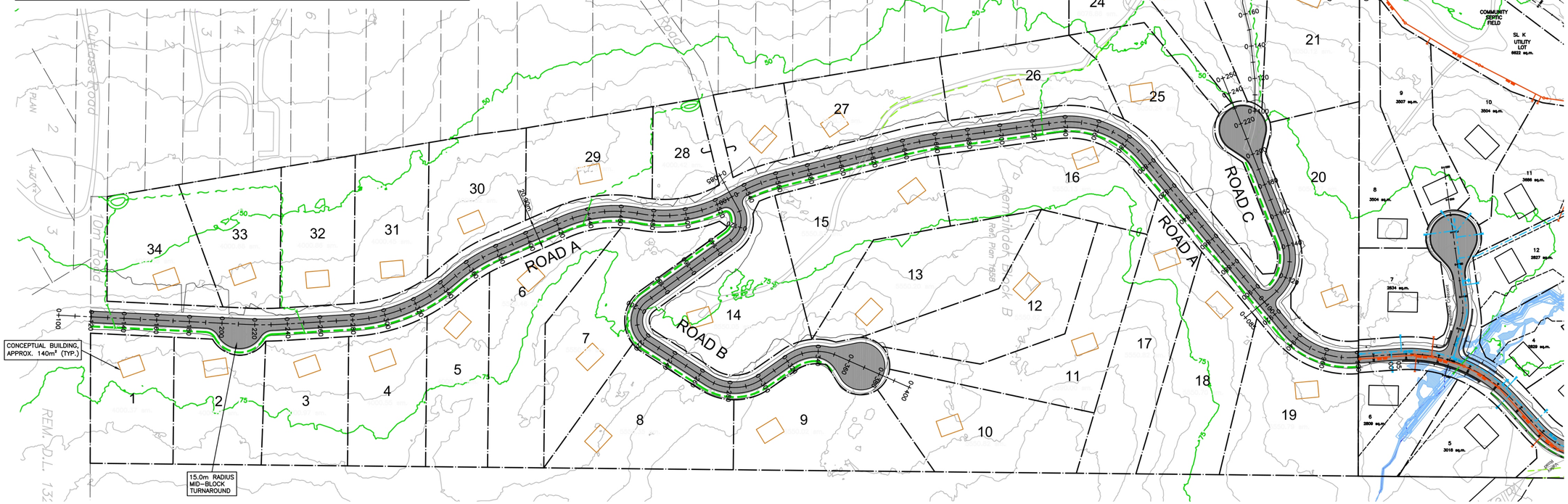

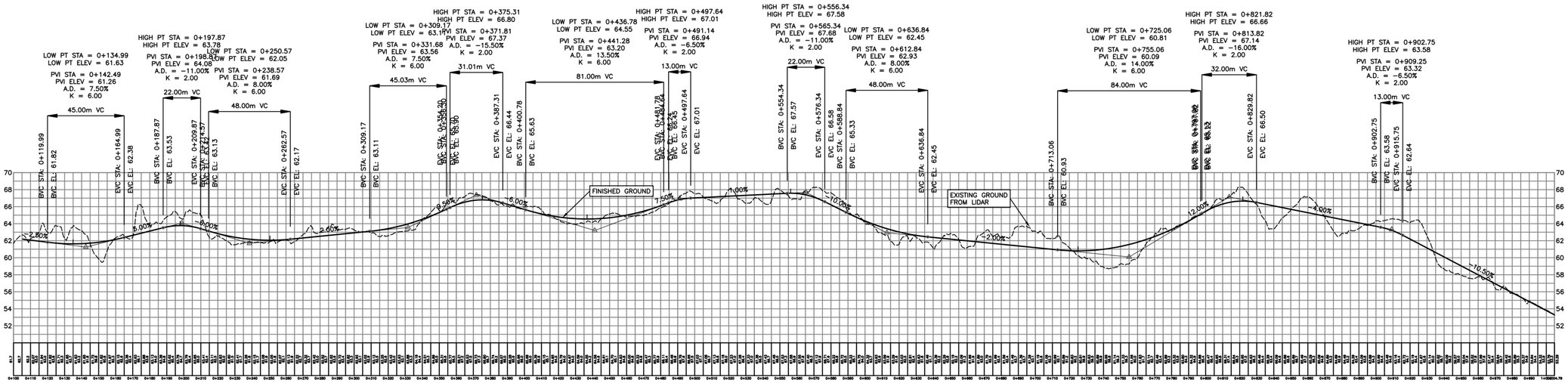

ROAD A
SCALE H: 1:1250, V: 1:250V

NOT FOR CONSTRUCTION

CREUS Engineering
Civil Engineers & Project Managers
#610 EAST TOWER - 221 ESPLANADE WEST, NORTH VANCOUVER BC, V7M3J3
PH: 604-987-9070 WEBSITE: www.creus.ca

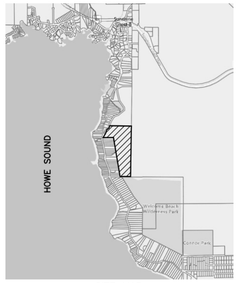

SITE MAP

DRAWING LEGEND

	EXISTING	PROP.	TO BE REMOVED
LEGAL LINE			
EASEMENT			
WATERMAIN			
SANITARY			
STORM			
HYDRO			
TEL			
STREETLIGHT			
GAS			

	EXISTING	PROP.	TO BE REMOVED
FIRE HYDRANT			
GATE VALVE			
AIR VALVE			
REDUCER			
INSPECTION CHAMBER			
CATCHBASIN (STD/SI)			
CAP			
MANHOLE			
POWER POLE			
STREETLIGHT			

approved

client
PARK PROPERTIES INC.

project
PRIESTLANDS PHASE 2
BC

title
ROADWORKS
ROAD A - SUB E
PLAN AND PROFILE

no.	(y/m/d)	revision	chk'd
1	21-12-21	ISSUED FOR SUBDIVISION	MHS

current TRV. #
1

engineer of record: KBH	scales: hor:1:1250 vert:1:250
designed by: KBH	file no. 21198
drawn by: TJV	drawing no. R-1-SUB E
date: 21-04-23	

Assuming Existing Zoning Subdivision E R2
From SCRD Bylaw 320 Section 406(5):
(Consolidated Oct. 8 2020)

Min. Lot area = 4,000m²
Max. 9,999m²
Avg. 5,000m²

Typical Frontage used = 30.5m (100ft)
Min. Frontage used = 10m (33ft)

Front yard setbacks = 5m
Front yard setbacks = 2m
Front yard setbacks = 1.5m

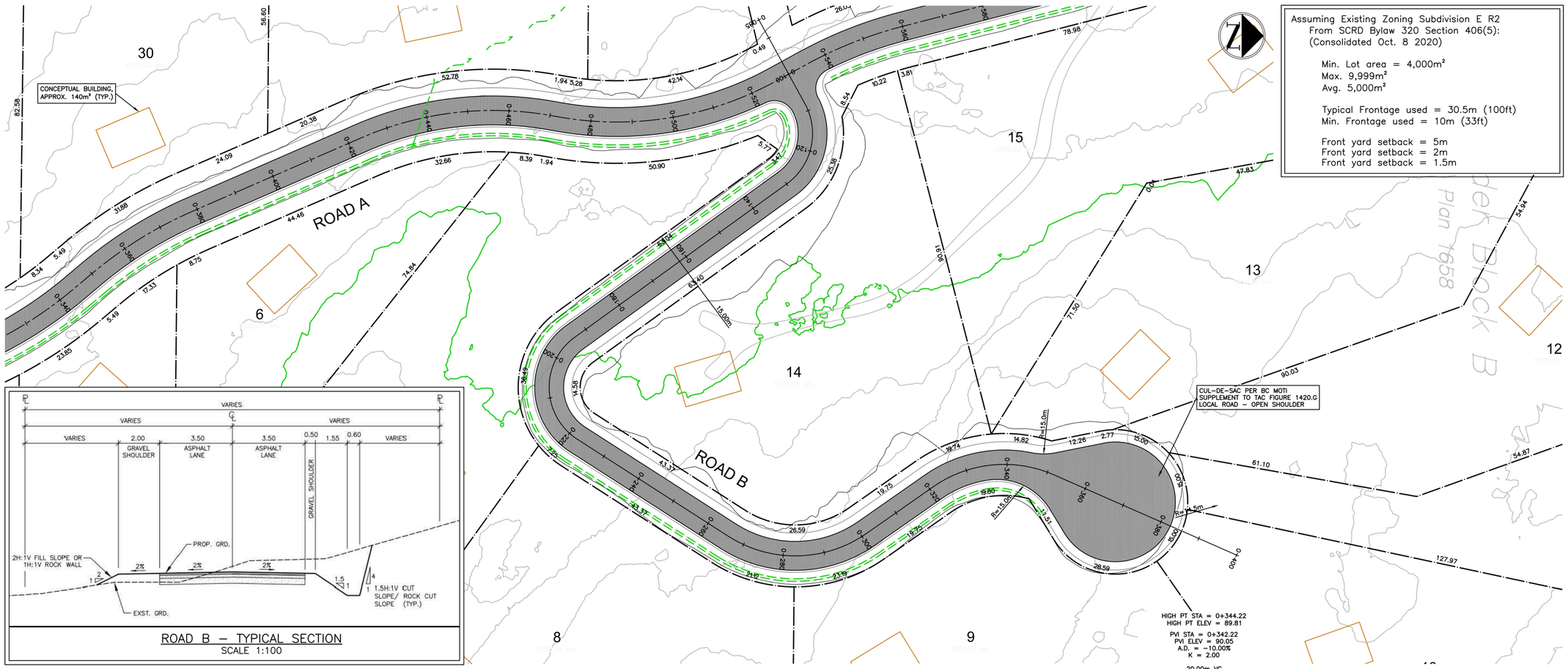

ROAD B – TYPICAL SECTION
SCALE 1:100

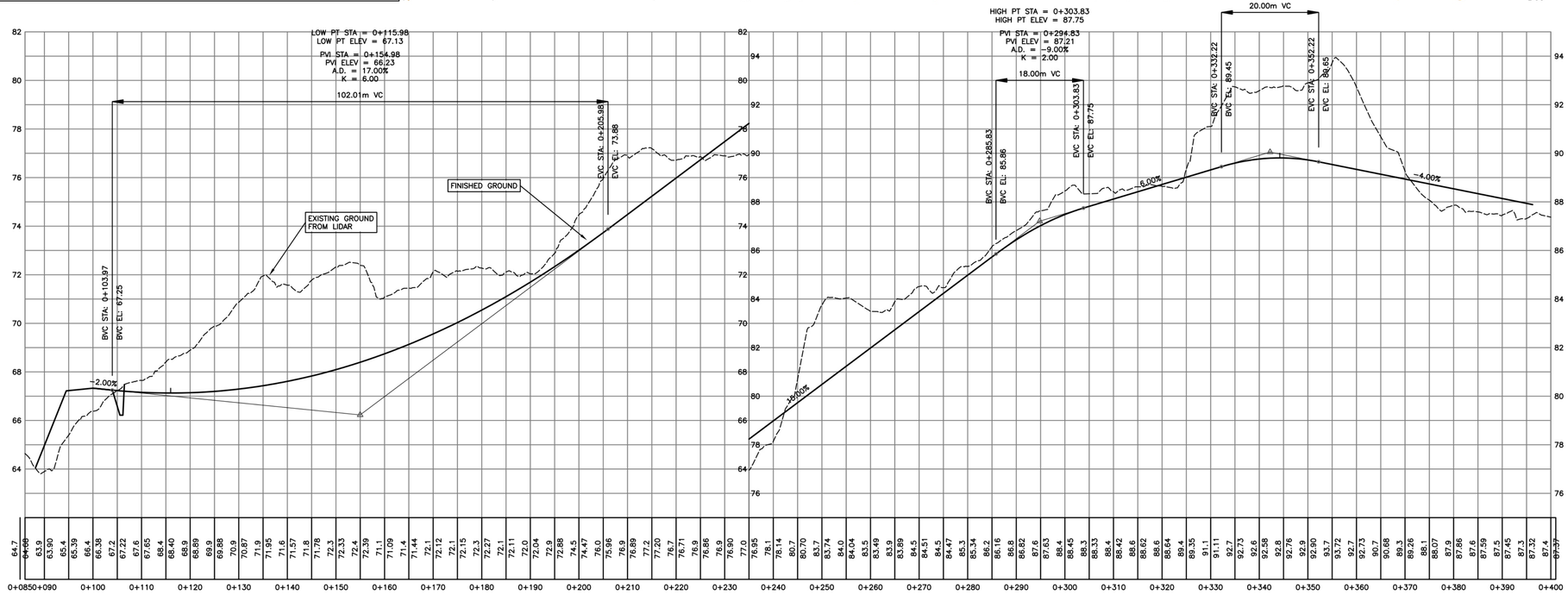

ROAD B
SCALE H: 1:500, V: 1:100V

NOT FOR CONSTRUCTION

CREUS Engineering

Civil Engineers & Project Managers
#610 EAST TOWER - 221 ESPLANADE WEST, NORTH VANCOUVER BC, V7M3J3
PH: 604-987-9070 WEBSITE: www.creus.ca

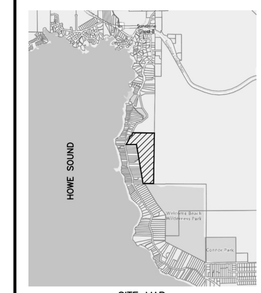

SITE MAP

DRAWING LEGEND

	EXISTING	PROP.	TO BE REMOVED
LEGAL LINE			
EASEMENT			
WATERMAIN			
SANITARY			
STORM			
HYDRO			
TEL			
STREETLIGHT			
GAS			

	EXISTING	PROP.	TO BE REMOVED
FIRE HYDRANT			
GATE VALVE			
AIR VALVE			
REDUCER			
INSPECTION CHAMBER			
CATCHBASIN (STD/SI)			
CAP			
MANHOLE			
POWER POLE			
STREETLIGHT			

approved

client
PARK PROPERTIES INC.

project
PRIESTLANDS PHASE 2
BC

title
ROADWORKS
ROAD B - SUB E
PLAN AND PROFILE

no.	(y/m/d)	revision	chk'd
1	21-12-21	ISSUED FOR SUBDIVISION	MHS

current rev. # 1

engineer of record: KBH	scales: hor: 1:500 vert:1:100
designed by: KBH	file no. 21198
drawn by: TJV	
date: 21-04-23	drawing no. R-2-SUB E

Assuming Existing Zoning Subdivision E R2
From SCRD Bylaw 320 Section 406(5):
(Consolidated Oct. 8 2020)

Min. Lot area = 4,000m²
Max. 9,999m²
Avg. 5,000m²

Typical Frontage used = 30.5m (100ft)
Min. Frontage used = 10m (33ft)

Front yard setback = 5m
Front yard setback = 2m
Front yard setback = 1.5m

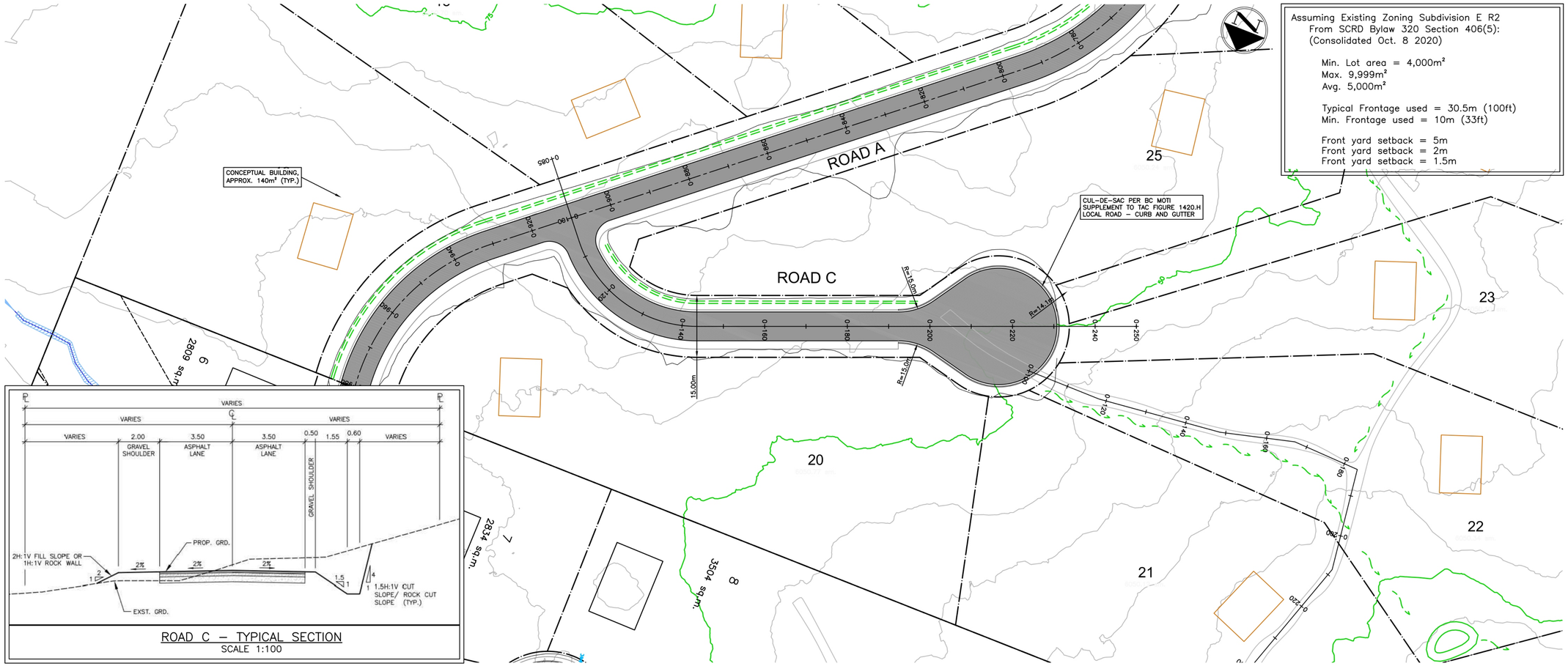

ROAD C – TYPICAL SECTION
SCALE 1:100

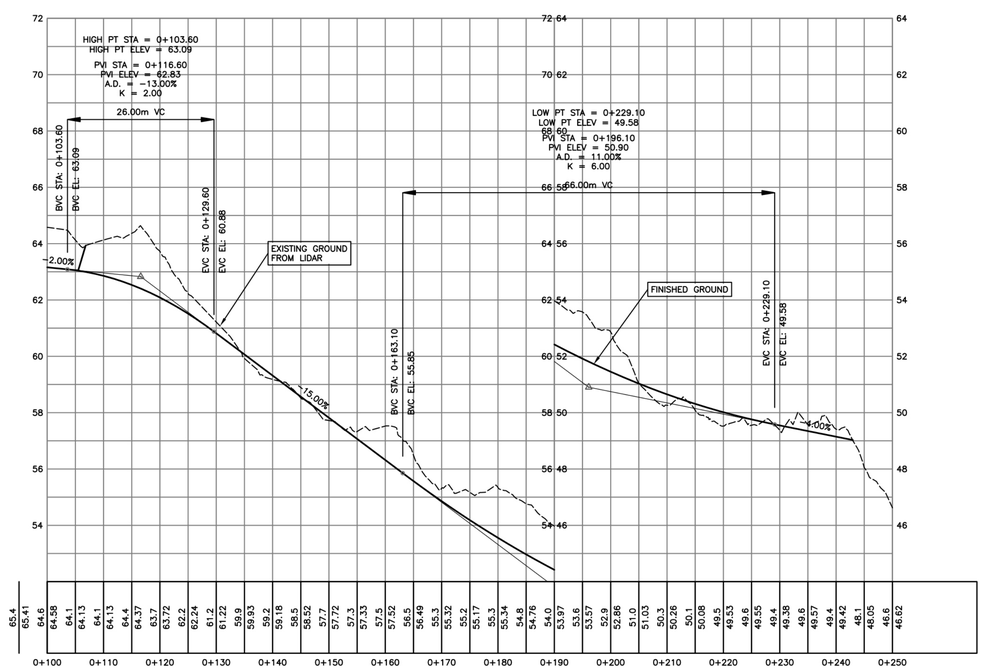

ROAD C
SCALE H: 1:500, V: 1:100V

NOT FOR CONSTRUCTION

CREUS Engineering
Civil Engineers & Project Managers
#610 EAST TOWER - 221 ESPLANADE WEST, NORTH VANCOUVER BC, V7M3J3
PH: 604-987-9070 WEBSITE: www.creus.ca

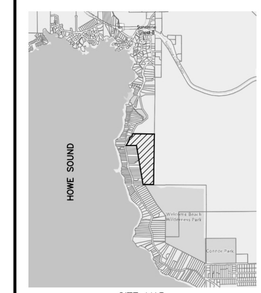

SITE MAP

DRAWING LEGEND

	EXISTING	PROP.	TO BE REMOVED
LEGAL LINE			
EASEMENT			
WATERMAIN			
SANITARY			
STORM			
HYDRO			
TEL			
STREETLIGHT			
GAS			

	EXISTING	PROP.	TO BE REMOVED
FIRE HYDRANT			
GATE VALVE			
AIR VALVE			
REDUCER			
INSPECTION CHAMBER			
CATCHBASIN (STD/SI)			
CAP			
MANHOLE			
POWER POLE			
STREETLIGHT			

approved

PROFESSIONAL ENGINEER K. B. HALY # 28402 BRITISH COLUMBIA

client
PARK PROPERTIES INC.

project
PRIESTLANDS PHASE 2
BC

title
ROADWORKS
ROAD C - SUB E
PLAN AND PROFILE

no.	(y/m/d)	revision	chk'd
1	21-12-21	ISSUED FOR SUBDIVISION	MHS

current rev. #: 1

engineer of record: KBH	scales: hor: 1:500 vert:1:100
designed by: KBH	file no. 21198
drawn by: TJV	drawing no. R-3-SUB E
date: 21-04-23	

SCRD STANDARD DETAIL DRAWINGS

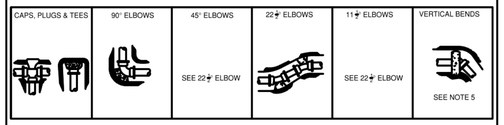

NOTE:

MAXIMUM ALLOWABLE SOIL BEARING LOADS MPA	FITTING SIZE MM	THRUST KN	MINIMUM BLOCK BASE AREA M2	THRUST KN	MINIMUM BLOCK BASE AREA M2	THRUST KN	MINIMUM BLOCK BASE AREA M2	THRUST KN	MINIMUM BLOCK BASE AREA M2	THRUST KN	MINIMUM BLOCK BASE AREA M2
1915.2 -HARDPAN OR SHALE-	100	16	0.019	23	0.023	12	0.009	6	0.007	3	0.004
	150	33	0.037	47	0.046	25	0.023	13	0.009	7	0.065
	200	57	0.056	81	0.084	44	0.460	22	0.023	11	0.009
	300	122	0.130	172	0.177	93	0.093	48	0.046	24	0.023
1149.1 -HARD CLAY-	100	16	0.023	23	0.037	12	0.019	6	0.009	3	0.006
	150	33	0.056	47	0.084	25	0.046	13	0.019	7	0.009
	200	57	0.102	81	0.140	44	0.074	22	0.037	11	0.019
	300	122	0.214	172	0.297	93	0.458	48	0.084	24	0.037
574.6 -SAND-COURSE, LOOSE OR FINE COMPACT	100	16	0.056	23	0.084	12	0.046	6	0.019	3	0.009
	150	33	0.112	47	0.093	25	0.093	13	0.046	7	0.019
	200	57	0.165	81	0.279	44	0.149	22	0.074	11	0.037
	300	122	0.148	172	0.604	93	0.316	48	0.167	24	0.084
191.5 -SOFT CLAY-	100	16	0.167	23	0.242	12	0.150	6	0.065	3	0.037
	150	33	0.344	47	0.492	25	0.260	13	0.139	7	0.065
	200	57	0.595	81	0.845	44	0.455	22	0.232	11	0.121

1. CONCRETE THRUST BLOCKS SHALL EXTEND INTO UNDISTURBED SOIL. THRUST IN 50° UNSTABLE SOILS WILL REQUIRE REMOVAL OF SOIL AND REPLACEMENT WITH COMPATIBLE FILL OR SUFFICIENT STABILITY TO RESIST THRUST OR SPECIAL ANCHOR BLOCK AS DIRECTED BY THE CITY ENGINEER.
2. BLOCKING WILL BE REQUIRED FOR ALL ELBOWS, TEES, PLUGS, CAPS,PIPE DEFLECTIONS, AND OTHER FITTINGS ON LIVE MAINS WHERE ANCHOR RODS ARE NOT PRACTICAL.
3. THRUST BLOCKS SHALL BE AT LEAST 10MPa 20 DAYS CONCRETE OR HIGH EARLY STRENGTH CONCRETE IF REQUIRED
4. AT VERTICAL BENDS BLOCKING SHALL BE OF SUFFICIENT WEIGHT TO RESIST OUTWARDS THRUST
5. BLOCKING SHALL BE KEPT OFF BELLS WHEN POSSIBLE.
6. FOR SPECIFIC AT IF LARGER PIPES, SEE ENGINEER.

CONCRETE BLOCKING — DRAWING NUMBER: **W8**

SCRD STANDARD DETAIL DRAWINGS

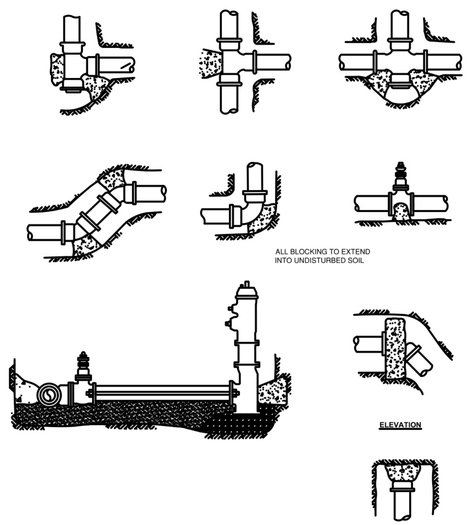

THRUST BLOCK LOCATIONS — DRAWING NUMBER: **W9**

MMCD STANDARD DETAIL DRAWINGS

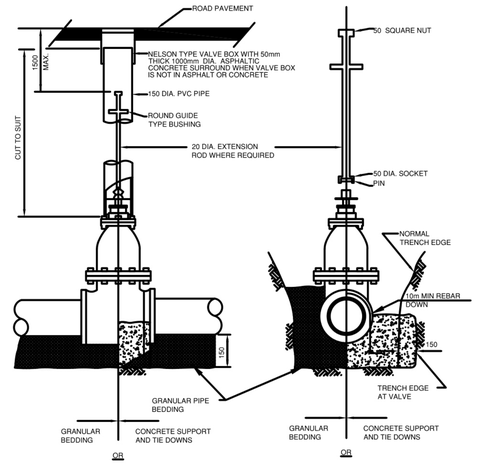

NOTE: 1. REFER TO CONTRACT DRAWINGS FOR VALVE INSTALLATION DETAILS IN AREAS OF UNSTABLE GROUND (WHERE APPLICABLE).
2. REFER TO CONTRACT DRAWINGS AND SECTION 02666 FOR DETAILED SPECIFICATIONS.

GATE VALVE INSTALLATION — DRAWING NUMBER: **W3**

MMCD STANDARD DETAIL DRAWINGS

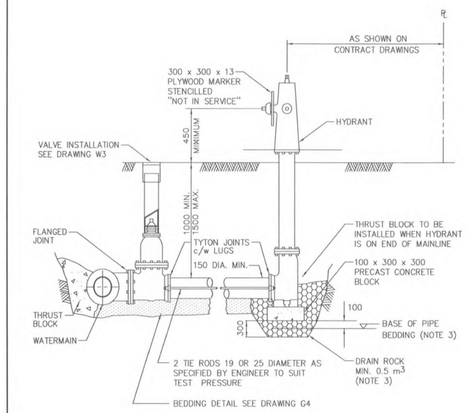

NOTE: 1. REFER TO SUPPLEMENTAL SPECIFICATIONS FOR HYDRANT PAINTING REQUIREMENTS.
2. REFER TO CONTRACT DRAWINGS, SECTION 33 11 01 FOR DETAILED SPECIFICATIONS.
3. FOR INSTALLATIONS SHOWN ON CONTRACT DRAWINGS WHERE WATER TABLE (AT SEASONAL HIGH) IS ABOVE BASE OF DRAIN ROCK, INSERT THREADED PLUGS IN DRAIN HOLES AND SUBSTITUTE GRANULAR PIPE BEDDING FOR DRAIN ROCK. (COMPACT PIPE BEDDING TO 95% MODIFIED PROCTOR DENSITY)

NOT TO SCALE

FIRE HYDRANT INSTALLATION — DRAWING NUMBER: **W4**

SCRD STANDARD DETAIL DRAWINGS

1. ALL WORK SHALL CONFORM TO THE MOST RECENT EDITION OF THE SUNSHINE COAST REGIONAL DISTRICT (SCRD) DESIGN AND CONSTRUCTION SPECIFICATIONS AND STANDARD DRAWINGS, AS WELL AS THE MASTER MUNICIPAL CONSTRUCTION DOCUMENTS. SCRD SPECIFICATIONS TAKE PRECEDENCE.

**2. ALL NEW HIGH DENSITY POLYETHYLENE WATERMAINS SHALL BE DR 11.
ALL NEW DUCTILE IRON WATERMAINS SHALL BE PRESSURE CLASS 350.**

3. WATERMAIN SHALL BE INSTALLED WITH 1.2m MINIMUM COVER UNDER ROADWAYS AND 1.0m ELSEWHERE. WATERMAIN SHALL BE INSTALLED TO SUIT EXISTING GROUND CONDITIONS. HDPE AND PVC WATERMAINS ARE TO BE LINED WITH TRACER WIRE.

4. EXISTING WATER SERVICE LOCATIONS AND SIZES TO BE DETERMINED PRIOR TO CONSTRUCTION. INSTALL THE NEW WATER SERVICES, COMPLETE WITH NEW CURB STOP AND METER BOX AS REQUIRED, AT THE SAME ELEVATION AS THE EXISTING CONNECTION.

5. ALL EXISTING UNDERGROUND UTILITIES (INCLUDING STORM, SANITARY, WATERMAINS, GAS MAINS, ELECTRICAL, TELEPHONE, STREETLIGHTING, ETC.) CROSSING ALONG THE COMPLETE PROPOSED WATERMAIN ALIGNMENT, INCLUDING TIE-IN LOCATIONS, SHALL BE LOCATED AND EXPOSED AND DEPTHS OF ALL UTILITIES RECORDED. THIS WORK TO PRECEDE WATERMAIN INSTALLATION BY THE DISTANCE REQUIRED TO ENSURE THAT THE LINE AND GRADE OF THE PROPOSED WATERMAIN CAN BE ADJUSTED TO SUIT FIELD CONDITIONS AS REQUIRED AND TO ENSURE THAT THE TEMPORARY ENDS OF THE WATERMAIN ARE SET TO ACCEPTABLE TIE IN ELEVATIONS. END PROPOSED WATERMAIN 3.0m FROM TIE IN LOCATIONS. ALL TIE-INS TO EXISTING WATERMAINS WILL BE COMPLETED AFTER TESTING AND FLUSHING.

**6. PROTECTION OF THE WATERMAIN:
PARALLEL LINES: WATERMAINS SHALL BE LAID AT LEAST 3m HORIZONTALLY FROM ANY SANITARY OR STORM SEWER. WHERE THIS HORIZONTAL SEPARATION IS NOT POSSIBLE, THE BOTTOM OF THE WATERMAIN SHALL BE AT LEAST 0.5m ABOVE THE TOP OF THE SEWER AND SUFFICIENTLY TO ONE SIDE OF THE SEWER TO ALLOW FOR SEWER REPAIRS WITHOUT DISTURBING THE WATERMAIN. IF THIS VERTICAL SEPARATION IS NOT POSSIBLE, THE SEWER SHALL BE OF THE SAME SERVICE CAPABILITY AS THE WATERMAIN, WITH PRESSURE CLASS JOINTS DESIGNED TO REMAIN WATER TIGHT IF THE GROUNDWATER TABLE PERIODICALLY RISES ABOVE THE SEWER, AND ARE PRESSURE TESTED BEFORE BACKFILLING. ALL JOINTS WITHIN 3m OF THE SANITARY OR STORM SEWER SHALL BE EITHER WRAPPED WITH HEAT SHRINK PLASTIC OR PACKED WITH INERT PETROLATUM COMPOUND AND WRAPPED IN TAPE IN ACCORDANCE WITH ANS/AWWA STANDARDS C209 AND C217-90 OR INCASED IN ACCORDANCE WITH MMCD STANDARDS G6 and G7.**

CROSSINGS: WHERE A WATERMAIN CROSSES A SANITARY OR STORM SEWER, THE LINES SHALL BE LAID WITH THE WATERMAIN CROSSING OVER THE SEWER AND WITH THE MIDDLE OF PIPE LENGTHS LOCATED AT THE CROSSING POINT, TO MAXIMIZE THE SEPARATION BETWEEN JOINTS. WHERE A MINIMUM 3m JOINT SEPARATION AND/OR MINIMUM 0.5m CLEAR VERTICAL SEPARATION IS NOT POSSIBLE AT THE CROSSING, PRECAUTIONS TO IMPROVE WATER TIGHTNESS OF THE SEWER JOINTS AND STRUCTURAL IMPROVEMENTS SUCH AS HIGHER STRENGTH WATERMAIN AND/OR SEWER AT THE CROSSING AREA ARE REQUIRED. ALL JOINTS WITHIN 3m OF THE CROSSING SHALL BE EITHER WRAPPED WITH HEAT SHRINK PLASTIC OR PACKED WITH INERT PETROLATUM COMPOUND AND WRAPPED IN TAPE IN ACCORDANCE WITH ANS/AWWA STANDARDS C209 AND C217-90 OR INCASED IN ACCORDANCE WITH SCRD STANDARD G6.

7. ALL WATER SERVICE CONNECTIONS TO BE 25mm DIAMETER TYPE K COPPER SERVICING PIPE FROM PROPERTY LINE TO THE NEW WATERMAIN UNLESS NOTED OTHERWISE.

8. THRUST BLOCKS TO BE PROVIDED AT ALL FITTINGS AND CHANGES IN DIRECTION UNLESS NOTED OTHERWISE. WHERE CONDITIONS DO NOT PERMIT THE USE OF THRUST BLOCKS, JOINT RESTRAINTS ARE TO BE USED.

9. THE SUNSHINE COAST REGIONAL DISTRICT WILL REMOVE AND RETURN TO THE SUNSHINE COAST REGIONAL DISTRICT WORKS YARD ALL EXISTING FIRE HYDRANTS ASSEMBLIES, GATE VALVES, ETC. CO-INCIDENT WITH TIE-IN OF WATERMAIN.

10. ALL PRESSURE TESTING CHLORINATION AND FLUSHING TO BE PERFORMED TO THE MINISTRY OF HEALTH AND AWWA STANDARDS. SEE SCRD DRAWING STANDARD N2.

11. RECORD DRAWINGS SHALL BE MAINTAINED BY THE CONTRACTOR THAT ACCURATELY DOCUMENT LOCATION AND DEPTH OF INSTALLED WORKS FOR SUBMISSION TO THE SCRD.

WATER WORKS NOTES — DRAWING NUMBER: **N1**

MMCD STANDARD DETAIL DRAWINGS

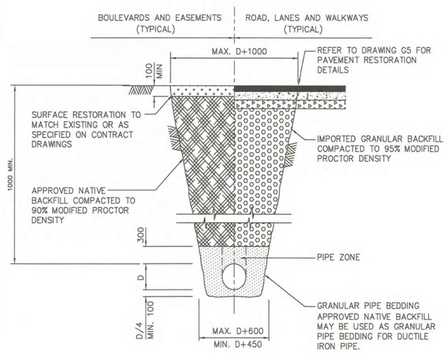

NOTE: 1. TRENCHING TO COMPLY WITH ALL REQUIREMENTS OF WORKSAFE BC.
2. REFER TO CONTRACT DRAWINGS, SECTION 31 23 01 FOR DETAILED SPECIFICATIONS.

NOT TO SCALE

UTILITY TRENCH — DRAWING NUMBER: **G4**

SCRD STANDARD DETAIL DRAWINGS

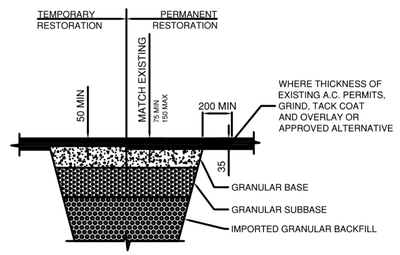

CLASSIFICATION	MINIMUM THICKNESS WITH SUBGRADE SOIL CLASSIFICATION SC & BETTER	MINIMUM THICKNESS WITH SUBGRADE SOIL CLASSIFICATION ML/CL/OL
LOCAL	50mm A.C. SURFACE COURSE 75mm BASE COURSE 150mm SUBBASE	50mm A.C. SURFACE COURSE 75mm BASE COURSE 300mm SUBBASE
COLLECTOR	35mm A.C. SURFACE COURSE 40mm A.C. LOWER COURSE 75mm BASE COURSE 175mm SUBBASE	35mm A.C. SURFACE COURSE 40mm A.C. LOWER COURSE 75mm BASE COURSE 325mm SUBBASE
ARTERIAL	40mm A.C. SURFACE COURSE 60mm A.C. LOWER COURSE 100mm BASE COURSE 300mm SUBBASE	40mm A.C. SURFACE COURSE 60mm A.C. LOWER COURSE 100mm BASE COURSE 500mm SUBBASE

NOTE: 1. REFER TO MMCD CONTRACT DRAWINGS, SECTIONS 31 23 01 AND 32 12 16 FOR DETAILED SPECIFICATIONS.
2. BASE, SUBBASE AND BACKFILL, COMPACTED TO 95% MODIFIED PROCTOR DENSITY.
3. SCRD STANDARD DETAIL G5 BASED ON MMCD STANDARD DETAIL G5, ANY UPDATES TO MMCD AFFECTING MMCD STANDARD DETAIL G5 MADE AFTER 2014-04-10 TAKES PRECEDENCE OVER SCRD STANDARD DETAIL G5

PAVEMENT RESTORATION — DRAWING NUMBER: **G5**

MMCD STANDARD DETAIL DRAWINGS

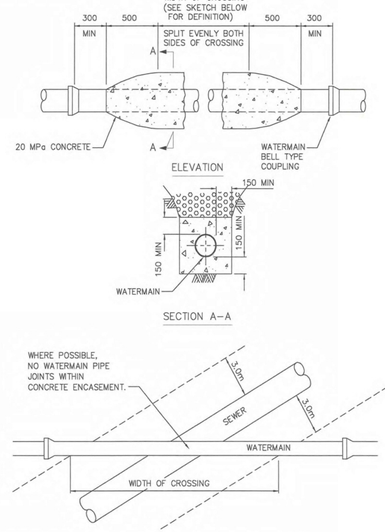

* CONTRACTOR TO REVIEW NEED FOR CONCRETE ENCASEMENT WITH ENGINEER PER VCH

NOTE: 1. THIS STANDARD IS APPLICABLE TO WATERMAIN/SEWER SEPARATION ONLY. SEE DRAWING G7 FOR CONCRETE PROTECTION OF UNDERGROUND UTILITIES.
2. REFER TO CONTRACT DRAWINGS, SECTION 31 23 01 FOR DETAILED SPECIFICATIONS.

NOT TO SCALE

CONCRETE ENCASEMENT FOR WATERMAIN/ SEWER SEPARATION — DRAWING NUMBER: **G6**

NOT FOR CONSTRUCTION

CREUS Engineering
Civil Engineers & Project Managers
#610 EAST TOWER - 221 ESPLANADE WEST, NORTH VANCOUVER BC, V7M3J3
PH: 604-987-9070 WEBSITE: www.creus.ca

SITE MAP

DRAWING LEGEND

	EXISTING	PROP.	TO BE REMOVED
LEGAL LINE			
EASEMENT			
WATERMAIN			
SANITARY			
STORM			
HYDRO			
TEL			
STREETLIGHT			
GAS			

	EXISTING	PROP.	TO BE REMOVED
FIRE HYDRANT			
GATE VALVE	SV	SV	SV
AIR VALVE			
REDUCER			
INSPECTION CHAMBER			
CATCHBASIN (STD/SI)			
CAP			
MANHOLE	SS MH	ST MH	SS MH
POWER POLE			
STREETLIGHT			

approved

PROFESSIONAL ENGINEER PROVINCE OF BRITISH COLUMBIA K. B. HEALY # 26840 BRITISH COLUMBIA U.M.I. ENGINEERING PERMIT

client: PARK PROPERTIES INC.

project: PRIESTLANDS PHASE 2 BC

title: STANDARD DETAILS

no.	(y/m/d)	revision	chk'd
1	21-12-21	ISSUED FOR SUBDIVISION	MHS

current rev. #: 1

engineer of record: KBH	scales: hor: - vert: -
designed by: KBH	file no.: 21198
drawn by: MHS	drawing no.: DET-1
date: 21-04-23	

MMCD STANDARD DETAIL DRAWINGS

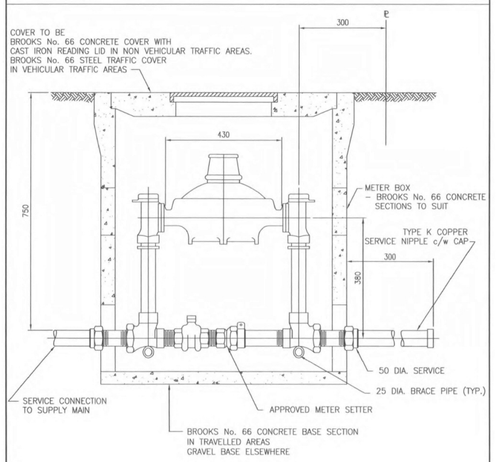

NOTES:

1. METER TO BE INSTALLED BY CITY.
2. METER SETTERS TO BE FOR FLANGED METERS AND EQUIPPED WITH BYPASS, LOCKABLE INLET VALVE, LOCKABLE BYPASS VALVE, AND CHECK VALVE OUTLET.
3. FOR 38mm CONNECTIONS PREAPPROVED METER SETTER IS FORD VFH66–156x13.
4. FOR 50mm CONNECTIONS PREAPPROVED METER SETTER IS FORD VFH77–156x17.
5. REFER TO CONTRACT DRAWINGS, SECTION 33 11 01 FOR DETAILED SPECIFICATIONS.
6. REFER TO DRAWING NUMBER W2a FOR DETAIL OF SERVICE CONNECTION TO WATER MAIN.

NOT TO SCALE

METER INSTALLATION
FOR 38mm AND 50mm
SERVICE CONNECTION

DRAWING NUMBER: **W2d**

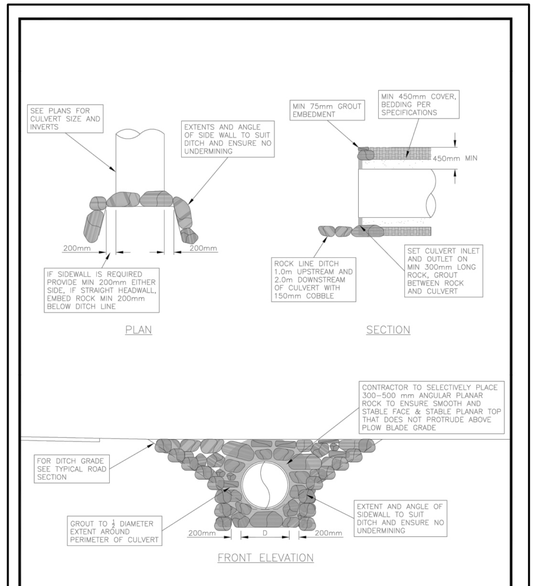

CREUS Engineering
Civil Engineers & Project Managers
#610 EAST TOWER - 221 ESPLANADE WEST, NORTH VANCOUVER BC, V7M3J3
PH: 604-987-9070 WEBSITE: www.creus.ca

title: ROCK STACK HEADWALL

drawn by: MCP
scale: 1:50
drawing #: D112

SCRD STANDARD DETAIL DRAWINGS

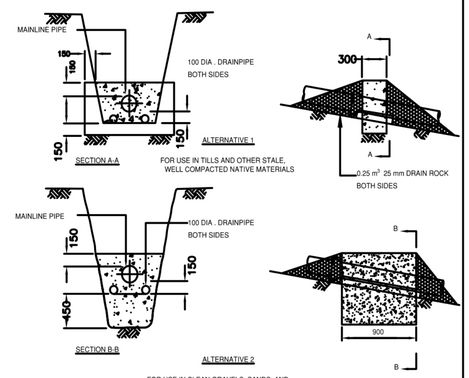

MAXIMUM SPACING OF ANCHOR BLOCKS (SEE NOTE 4)			
SANITARY AND STORM GRAVITY SEWERS		WATERMAINS AND FORCEMAINS	
SLOPE	MAX. SPACING	SLOPE	MAX. SPACING
15% - 20%	25m	10% OR GREATER	10m
20% - 35%	20m		
35% - 50%	15m		
50% - OVER	10m		

NOTE:
1. APPLICABLE TO ALL PIPE MATERIALS.
2. USE ALTERNATIVES 1 OR 2 AS SPECIFIED ON CONTRACT DRAWINGS.
3. USE 20 MPa CONCRETE UNLESS SPECIFIED OTHERWISE ON CONTRACT DRAWINGS.
4. REFER TO CONTRACT DRAWINGS FOR SPECIFIED SPACING IF OTHER THAN MAXIMUM SHON IN TABLE.

PIPE ANCHOR BLOCKS

DRAWING NUMBER: **G8**

MMCD STANDARD DETAIL DRAWINGS

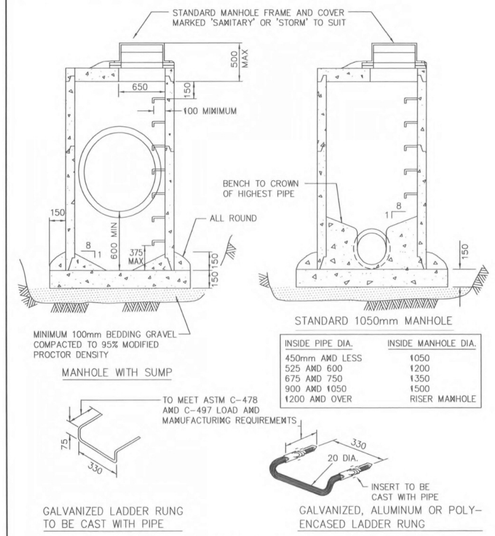

INSIDE PIPE DIA.	INSIDE MANHOLE DIA.
450mm AND LESS	1050
525 AND 600	1200
675 AND 750	1350
900 AND 1050	1500
1200 AND OVER	RISER MANHOLE

NOTE:
1. DETAILS ARE DRAWN FOR PRECAST RISERS OR CAST–IN–PLACE BASE. PRECAST BASES APPROVED BY CONTRACT ADMINISTRATOR ARE ACCEPTABLE.
2. MAXIMUM DEPTH TO FIRST RUNG IS 500mm. WHEN HANDHOLD IS INSTALLED BETWEEN TOP AND FIRST RUNG, MAXIMUM DEPTH MAY BE INCREASED TO 660mm
3. FOR MANHOLES OVER 1200mm DIA. BASE THICKNESS TO BE 200mm.
4. REFER TO DRAWING S2 FOR CONNECTION DETAILS.
5. REFER TO CONTRACT DRAWINGS, SECTION 33 44 01 FOR DETAILED SPECIFICATIONS.

NOT TO SCALE

STANDARD AND SUMP MANHOLES

DRAWING NUMBER: **S1**

SCRD STANDARD DETAIL DRAWINGS

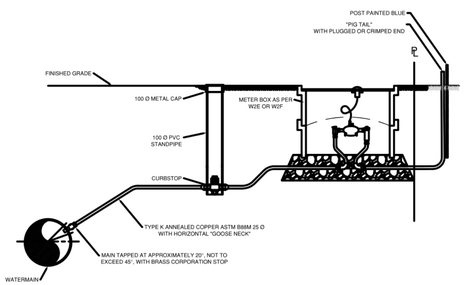

25mm Ø TO 50mm Ø CONNECTION

1) WATER SERVICE CONNECTIONS SHALL BE AT LEAST 3.0m AWAY FROM PARALLEL SEWER SERVICE CONNECTIONS.
2) ALL MEASUREMENTS IN MILLIMETERS UNLESS STATED OTHERWISE

NOT TO SCALE

WATER SERVICE CONNECTION

DRAWING NUMBER: **W1**

SCRD STANDARD DETAIL DRAWINGS

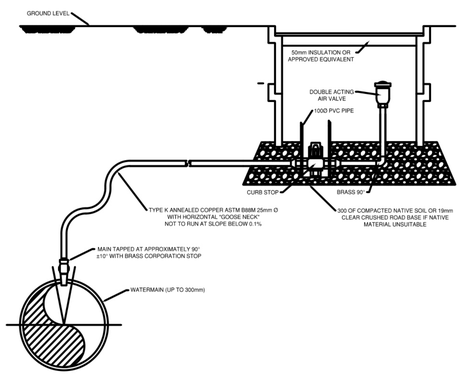

NOTES:

1. METER BOX TO BE ARMTEC AE UTILITY BOX OR APPROVED EQUIVALENT
2. ALL MEASUREMENTS IN MILLIMETERS UNLESS STATED OTHERWISE
3. ALL AIR VALVES TO BE OF THE DOUBLE ACTING TYPE. TERMINAL CITY IRON WORKS, A.V.24 OR EQUIVALENT

AIR VALVE ASSEMBLY

NOT TO SCALE

DRAWING NUMBER: W6

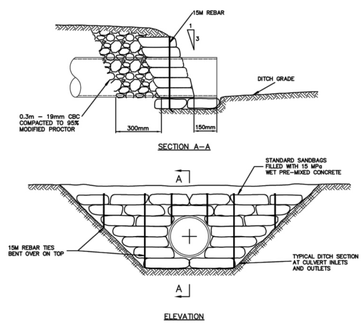

NOTES:
1. IF THE HORIZONTAL DIRECTION OF FLOW AT CULVERT INLETS AND OUTLETS EXCEEDS 30° , THEN THE SANDBAG BULKHEADS REQUIRE CURVED WING WALLS TO FUNNEL THE FLOW.

CONCRETE SANDBAG HEADWALL FOR
CULVERT INLETS & OUTLETS

CREUS Engineering
Civil Engineers & Project Managers
PH: 604-987-9070 WEB: www.creus.ca

dwg by: TJV | rev by:
dwg date: 21/04/12 | rev date:
dwg #: D113 | rev #:

SCRD STANDARD DETAIL DRAWINGS

THE FOLLOWING IS COMPLEMENTARY TO THE SCRD BYLAWS AND DOES NOT NULLIFY THEM IN PART OR WHOLE.

1) THE SUNSHINE COAST REGIONAL DISTRICT ENGINEER, OR DULY AUTHORIZED REPRESENTATIVES, HENCEFORTH REFERRED TO AS "SCRD ENGINEER", MAY BE SCHEDULED TO INSPECT WATERWORKS PROJECTS, GIVEN FORTY-EIGHT HOURS' NOTICE, BETWEEN 9:30 AND 15:30, MONDAY TO FRIDAY, SUBJECT TO AVAILABILITY.

2) IN ACCORDANCE WITH BYLAW 320, SECTION II, PAGE 2, ARTICLE 8, THE OWNER'S REPRESENTATIVE SHALL ARRANGE TO MEET WITH THE SCRD ENGINEER PRIOR TO THE START OF CONSTRUCTION. AT THIS TIME THE SCRD ENGINEER WILL INFORM THE OWNER'S REPRESENTATIVE OF THE REQUIRED STAGES OF INSPECTION.

3) QUALIFIED INSPECTORS FROM THE PRIVATE SECTOR (I.E. THIRD PARTY ENGINEERS), MAY BE USED AS AN ALTERNATIVE TO THE SCRD ENGINEER FOR THE PURPOSES OF LEAKAGE TESTING AND DISINFECTION PROCEDURE, PROVIDED THAT THE SCRD HAS APPROVED OF THE USE OF THEIR SERVICES, AND THAT A QUALIFIED PROFESSIONAL ENGINEER PROVIDES A SIGNED AND SEALED LETTER, CONFIRMING THAT THE TEST(S) WERE COMPLETED TO MMCD, VCH, AWWA, AND SCRD STANDARDS.

4) THE SCRD ENGINEER, OR AUTHORIZED INSPECTOR, MUST BE PRESENT AND WITNESS THE LEAKAGE TESTING AS DESCRIBED IN BYLAW 320, SECTION VI, PAGE 9, ARTICLE 3.18. THE SCRD ENGINEER, OR AUTHORIZED INSPECTOR, MUST BE PRESENT WHEN THE MAIN IS FULLY PRESSURIZED AND AGAIN FOLLOWING TWO HOURS OF CONSTANT PRESSURIZATION.

5) PRIOR TO DISINFECTION OF THE WATERWORKS, THE SCRD MUST RECEIVE WRITTEN NOTIFICATION OF THE DE-CHLORINATION METHOD THAT WILL BE USED FOLLOWING THE FLUSHING OF THE WATERWORKS. THE SCRD ENGINEER, OR AUTHORIZED INSPECTOR, MUST BE PRESENT AND WITNESS THE DISINFECTION AS DESCRIBED IN BYLAW 320, SECTION VI, PAGE 10, ARTICLE 3.19. THE SCRD ENGINEER, OR AUTHORIZED INSPECTOR, MUST BE PRESENT WHEN THE MAIN IS FULLY CHLORINATED AND AGAIN FOLLOWING TWENTY-FOUR HOURS OF CHLORINATION.

6) THE COLLECTION OF SAMPLES FOR COLIFORM BACTERIA TESTING WILL BE PERFORMED BY THE SUNSHINE COAST REGIONAL DISTRICT SENIOR WATER TECHNICIAN, OR DULY AUTHORIZED REPRESENTATIVE. THIRD PARTY PERSONNEL WILL NOT BE PERMITTED TO COLLECT SAMPLES FOR COLIFORM TESTING. SAMPLES FOR COLIFORM TESTING WILL NOT BE TAKEN UNTIL THE DISINFECTION AND FLUSHING OF THE WATERWORKS HAS BEEN COMPLETED TO THE SATISFACTION OF THE SCRD ENGINEER.

7) THE SCRD UTILITIES COORDINATOR WILL BE ASKED TO PROCEED WITH THE FINAL TIE-IN UPON THE COMPLETION OF THE ABOVE MENTIONED LEAKAGE TESTING, DISINFECTION, AND COLIFORM BACTERIA TESTING TO THE SATISFACTION OF THE SCRD ENGINEER.

INSPECTION NOTES

DRAWING NUMBER: **N2**

NOT FOR CONSTRUCTION

CREUS Engineering
Civil Engineers & Project Managers
#610 EAST TOWER - 221 ESPLANADE WEST, NORTH VANCOUVER BC, V7M3J3
PH: 604-987-9070 WEBSITE: www.creus.ca

SITE MAP

DRAWING LEGEND

	EXISTING	PROP.	TO BE REMOVED
LEGAL LINE			
EASEMENT			
WATERMAIN			
SANITARY			
STORM			
HYDRO			
TEL			
STREETLIGHT			
GAS			

	EXISTING	PROP.	TO BE REMOVED
FIRE HYDRANT			
GATE VALVE			
AIR VALVE			
REDUCER			
INSPECTION CHAMBER			
CATCHBASIN (STD/SI)			
CAP			
MANHOLE			
POWER POLE			
STREETLIGHT			

approved

PROFESSIONAL ENGINEER — K. B. HEALY # 26840 — BRITISH COLUMBIA

client: PARK PROPERTIES INC.

project: PRIESTLANDS PHASE 2 BC

title: STANDARD DETAILS

no.	(y/m/d)	revision	chk'd
1	21-12-21	ISSUED FOR SUBDIVISION	MHS

current rev. # 1

engineer of record: KBH	scales: hor: - vert: -
designed by: KBH	file no. 21198
drawn by: MHS	drawing no. DET-2
date: 21-04-23	